KLINGER Fluid Control

KLINGER Ballostar® KHI
Split body ball valves
DN 150 – 1000

CE 0408
Conformity with Pressure Equipment Directive 97/23/EC

Tel. +43 (0)2252 600-0
Fax +43 (0)2252 600-100
Web: www.klinger.kfc.at

Edition 2011

KLINGER Ballostar® ball valves

KLINGER Ballostar® KHI sealing system

Operational principle of the Ballostar® KHI sealing system

Due to the elastic system in the ball valve, leak-tightness is guaranteed at high as well as at low pressures. These two independently working sealing elements are preloaded during assembly. Furthermore they are driven against the ball by the differential pressure of the media. As it is a trunnion mounted ball valve, the pressure is not transmitted onto the seat rings. The valve can be used bidirectionally.

Expansion caused by heat is compensated by the elasticity of the sealing elements.

This elasticity provides continuously two main-sealing areas in the bore up to a certain pressure rate. With the fluid pressing onto the differential surfaces of the sealing element the seat ring is squeezed to the ball surface.
As soons as pressure from the clearance volume is admitted to the ball and exeeds the nominal pressure, the ball pushes against the sealing ring on the outlet and keeps it tight to the atmosphere as well.

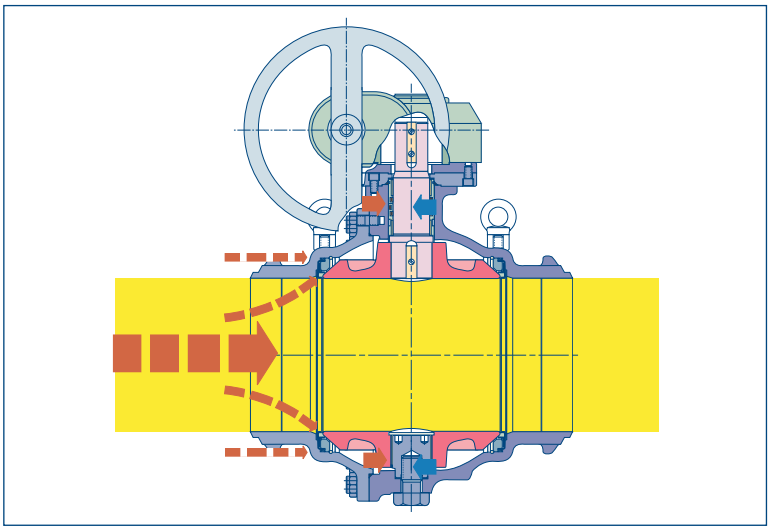

Operational principle of KLINGER Ballostar sealing system

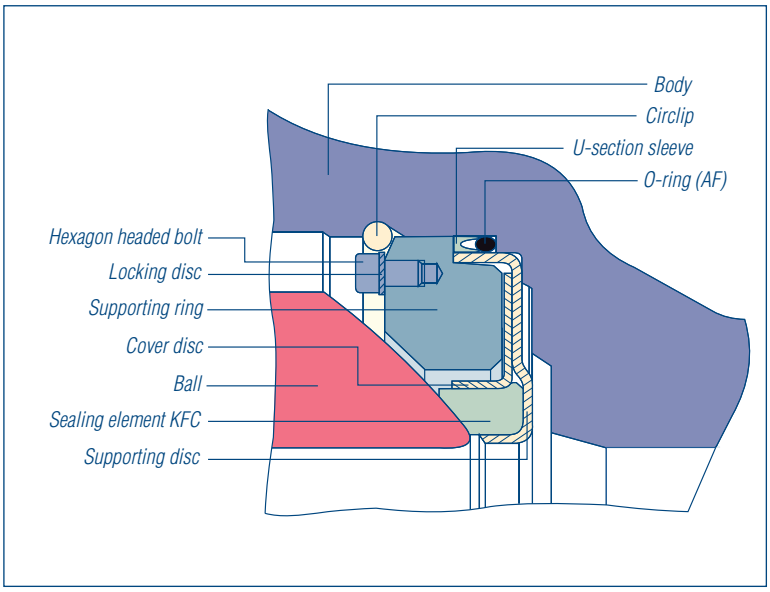

Standard internal sealing system

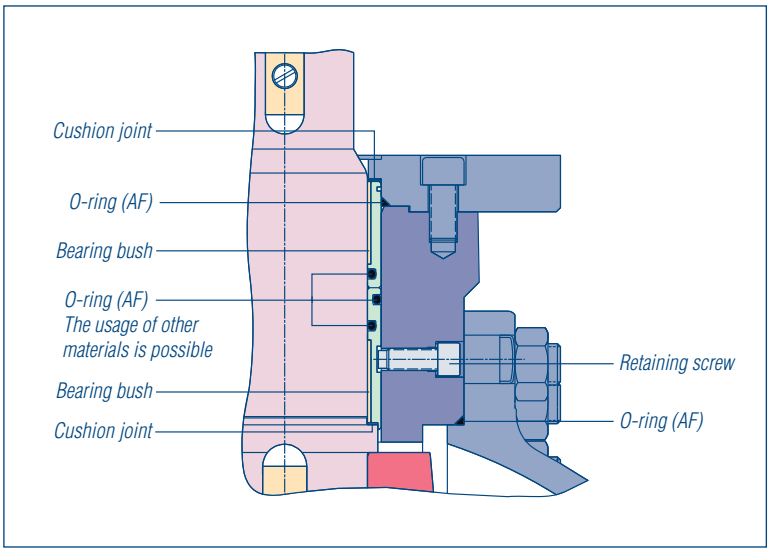

Standard sealing system of the operating stem

KLINGER Ballostar® KHI sealing system

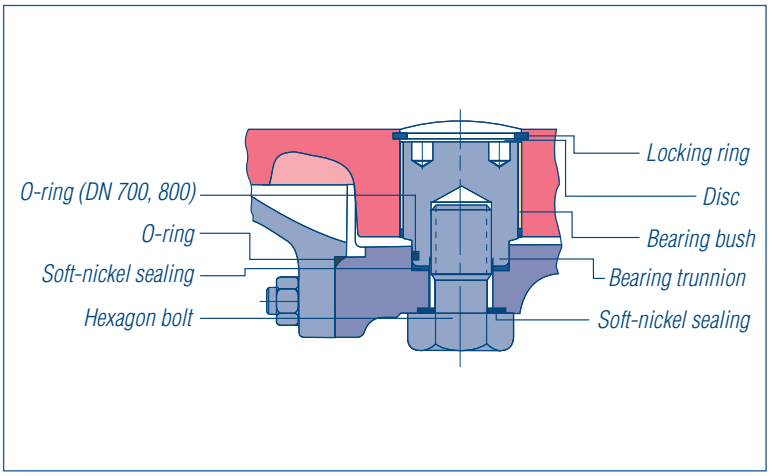

Bearing of the ball

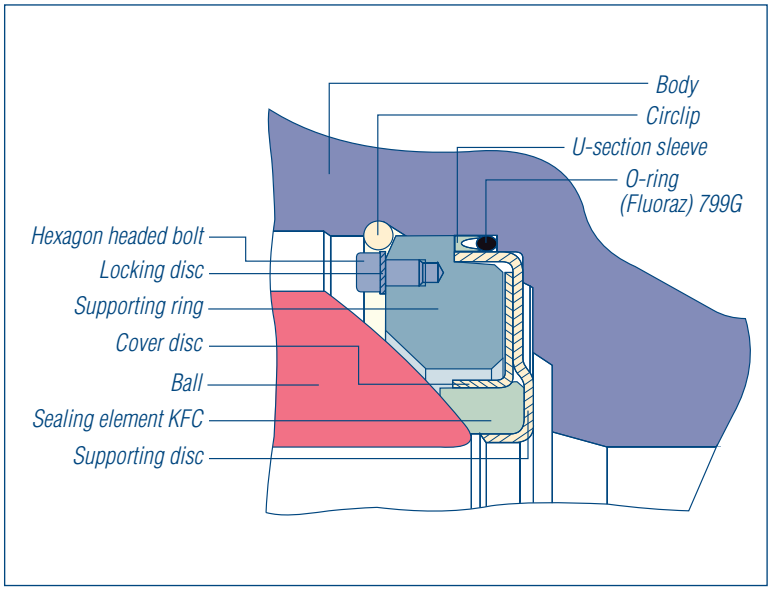

Internal sealing system for superheated water- and steam-applications:
KHSVWI/KHWI

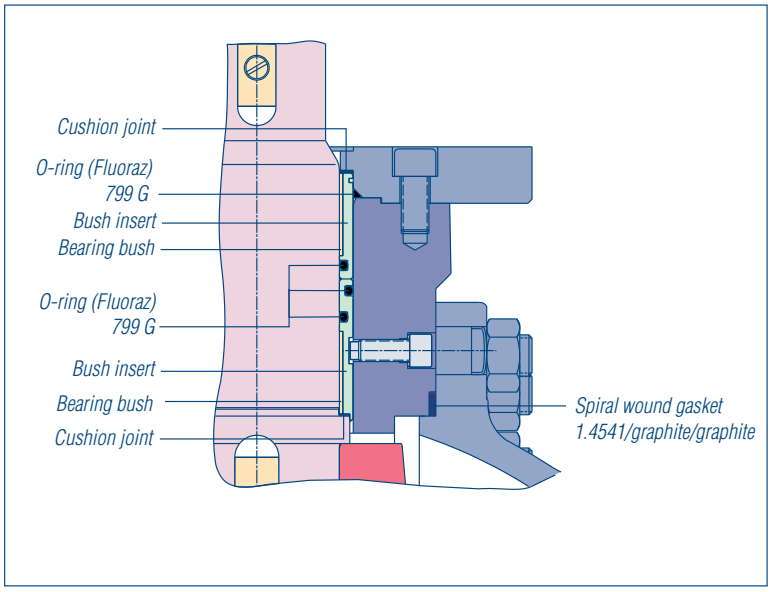

Operating-stem sealing for superheated water- and steam-application:
Types KHSVWI/KHWI

Function

When assembling the body and the connection piece the sealing system elastically preloads the ball. Two resilient sealing elements made of acid resistant steel with sealing ring and a sealing at the periphery of the supporting cushions joint, together with the ball, form a sealing system that works in both flow directions. A supporting ring protects the resilient sealing element from overstress. The sealing unit is held by a circlip.

Because of the special sealing system the clearance volume of the ball valve can be drained, ventilated or relieved from pressure through a bleeding connection. This allows to check if both sealing rings are tight, after the pressure has been relieved (Block & Bleed).

It additionally allows repairs in a depressurised pipe section between two ball valves.

The Ballostar ball valve is acknowledged by TÜV as double acting shut-off valve in compliance to TRD and UVV (technical guidelines for steam boilers).

Mounting options

Ball valve DN 150, DN 200, flange connection acc. to ISO 5211 (F12, F14)

Mounting with bracket

F12, F14

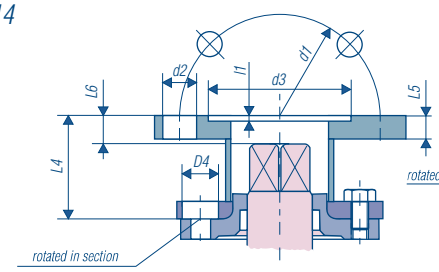

Mounting with bare shaft

F12, F14

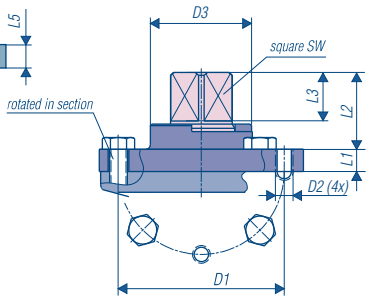

DN	150		200	
D1	112		150	
D2	M12		M16	
D3	69		93,5	
D4	25		30	
L1	15		18	
L2	52		67,5	
L3	32,8		42,8	
SW	32		41	
	F12	F14	F12	F14
L4	76	71	80	86
L5	15	15	14	20
L6	24	19	12,5	18,5
d1	125	140	125	140
d2	14	18	14	18
d3	85	100	85	100
l1	4	5	4	5

Ball valves DN 250 - DN 1000, flange connection acc. to ISO 5211

Mounting-flange is also dimensioned according to ISO 5211.

Mounting with bare shaft

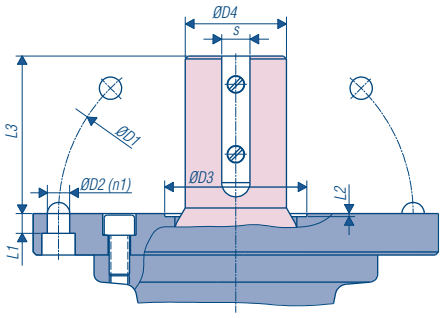

Mounting with distance plate

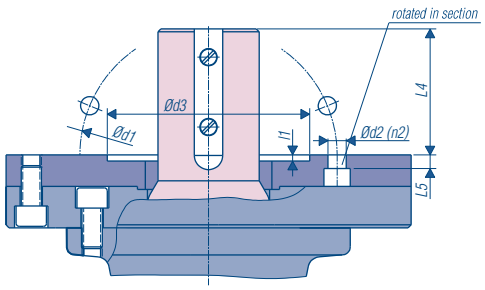

DN	250/300		350/400	500/600		700/800
D1	240		280	350		500
D2	18		22	22		33
D3	110,2		140,3	140,3		260,1
D4	60		80	100		140
L1	13,5		19,5	19,5		19
L2	3		3	3		5,1
L3	108		128	155		193
n1	4		4	8		8
s	18		22	28		36
ISO 5211	**F25**	**F16**	**F25**	**F25**	**F30**	**F35**
L4	77		97	124		148
L5	9,5	13,5	13,5	13,5	10,5	13
d1	165	254	254	254	298	356
d2	22	18	18	18	22	33
d3	130	200	200	200	230	260
l1	6		6	6		6
n2	4	8	8	8	8	8

In the interest of technical progress, design and dimensions are subject to modification

Automation

Automation of valves

With automation continuously rising, different types of actuators are being applied for which extreme reliability is indispensable.
Different kinds of demands can easily be met with the help of actuators. Modular mounting and a wide range of accessory units which can be updated, make it possible to satisfy individual customer requests and adaptions to specific applications.

Two types of automatic actuators are available:

***Directly operated** – the actuator is directly connected with the operating stem via coupling.*

***Indirectly operated** – the actuator acts via intermediate gearing.*

Recommendation

If the manual force for operating is higher than 500 Nm we advise you to use a mechanical gear.

Suitable actuators

Due to the flange connection acc. to ISO 5211 lots of different gears and actuators from various manufacturers can be easily attached to Klinger Ballostar KHI ball valves.

Torques for actuator dimensioning

Standard design, KFC seat rings
Operating pressure 25 bar:

DN	Mt (Nm)
150	651
200	1069
250	2083
300	3710
350	5068
400	6251
500	8701
600	13020
700	19320
800	31395
1000	60000

Standard design, KFC seat rings
Operating pressure 40 bar:

DN	Mt (Nm)
150	1260
200	1757
250	2905
300	5733
350	7063
400	7987
500	11655
600	15540
700	27510
800	36960
1000	75000

Standard design, metal seat
Operating pressure 16 bar

DN	Mt (Nm)
150	882
200	1372
250	2646
300	4998
350	6958
400	8526
500	10668

Standard design, metal seat
Operating pressure 25 bar:

DN	Mt (Nm)
150	1176
200	1764
250	3528
300	6272
350	8624
400	10192
500	14063

Please note that:
Generally the above specified values accord to the maximum breakaway (static) torques. At difficult operating conditions (pressure, temperature, media) and if the valve is operated less than 4-times a year we recommend to contact our technical department.
*In such cases the corresponding torque value (Mt) has to be multiplied by a **safety factor** to choose the best suitable actuator.*

Tests and approvals

Product approvals and component tests for KLINGER Ballostar KHI

	With regard to:	Testing company
1	Type approval KHI 150-600 application on ships	Llyod's Register
2	Fire-safe test KHI 150.–.600 acc.to API 607/4. Ed	TÜV Austria
3	Approval of double shut-off with KHI (meets TRD 601-requirements)	TÜV Bavaria
4	Product approval ball valves and valves in Ukraina	OC Ketz
5	Product approval ball valves for tanks transboreing hazardous goods in Czech Republic	Drazni Urad
6	Release for drinking water	TGM Vienna
7	Compliance with requirements of PED 97/23/EC is certified	TÜV Austria
8	Component test acc. to EN 488 – KHSVI 300/250 fully welded	FFI-Hannover
9	Determination of flow resistance KHSVI 300/250 weld ends	Arsenal Research
10	Type approval acc. to EN 161	TÜV Austria
11	Gasapproval GK(SV)HI	ÖGVW
12	GOST-Approval for Ballostar ball valves	VNIIIMASH

Quality certificate: TÜV-Bayern confirms that KLINGER Ballostar can be used as a double acting shut off-device with intermediate relaxation.

The two independent sealing elements, one on each side of the ball with their preloaded springforce, keep leaktight at any time – bidirectional and in all operating conditions – even with vacuum! KLINGER Ballostar makes up for two valves of any kind! This means both cost and space savings.

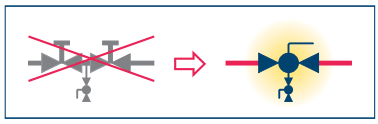

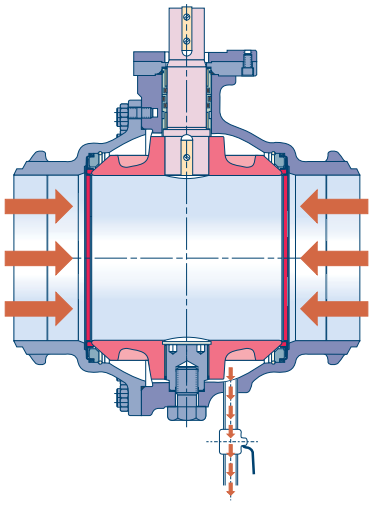

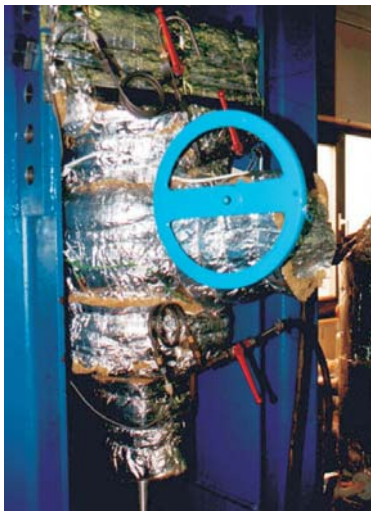

Ballostar KHI: Test acc. to EN 488

KLINGER Ballostar: Test acc. to EN 488 at FFI

The district heating-research institute in Hannover (FFI) tested the KLINGER Ballostar ball valves acc. to EN 488. During this test the valves are exposed to different kinds of axial tensions and pressure loads at a temperature of 140.°C. The leak tighness of body, shaft and seat is tested and the operating torques are determined.

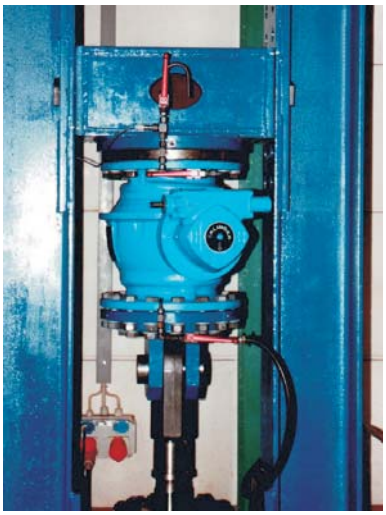

Ballostar KHI: Test acc. to EN 488

In the interest of technical progress, design and dimensions are subject to modification

KLINGER Ballostar® materials and coefficients

Material code

Material code	Body	End piece	Internals	Colour of body
III	Cast iron	Cast iron	Without copper alloy parts	grey
VII	Cast steel	Cast steel	Copper alloy parts included	blue
X	Acid resistant steel	Acid resistant steel	Acid resistant steel, nuts and screws steel galvanized	unpainted
Xc	Acid resistant steel	Acid resistant steel	Acid resistant steel	unpainted

Primery criterion for the material code is the basic material of the body and end piece.

Flow coefficients and zeta-values, full bore

DN	150	200	250	300	350	400	500	600	700	800	1000
k_V	4203	8131	13630	20590	29540	38582	59978	95695	118940	154245	242900
ξ	0,045	0,038	0,033	0,030	0,027	0,027	0,025	0,025	0,025	0,025	0,025

Flow coefficients and zeta-values, casted version with reduced bore

DN	150/125	200/150	250/200	300/250	350/300	400/350	500/400	600/500	700/600	800/700
k_V	1642	2920	4640	6682	9256	12090	19604	28230	39186	51182
ξ	0,3	0,3	0,29	0,29	0,28	0,28	0,26	0,26	0,25	0,25

ξ = Zeta-value
k_V = flow coefficient (m^3/h)
Graphs and exact flow calculations for all KLINGER valves are available on request.

The k_V-value represents a characteristic size for shut-off and control devices. This shows the flow rate of H_2O in m^3/h from 5–30 °C with a pressure difference
Δp = 1 bar at the valve.

Countries which use the inch as measuring unit the c_V-value replaces the k_V-value. This value indicates how many US gal. of water, at the temperature of 60°F and a loss of pressure of 1 psi, pass the valve every minute.

$c_V = 1{,}1558\ KV$
$k_V = 0{,}8652\ CV$

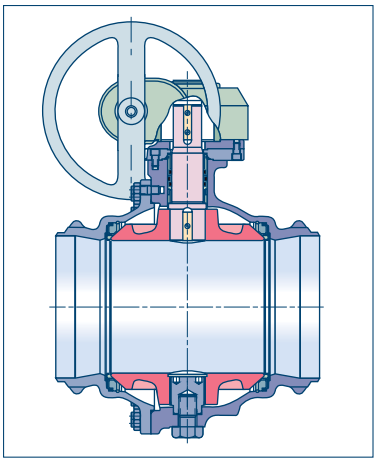

Variation 1: ball valve with reduced bore

Dimension: 800/700 cast version

ξ-value: 0,25
k_V-value: 51 182 m^3/h

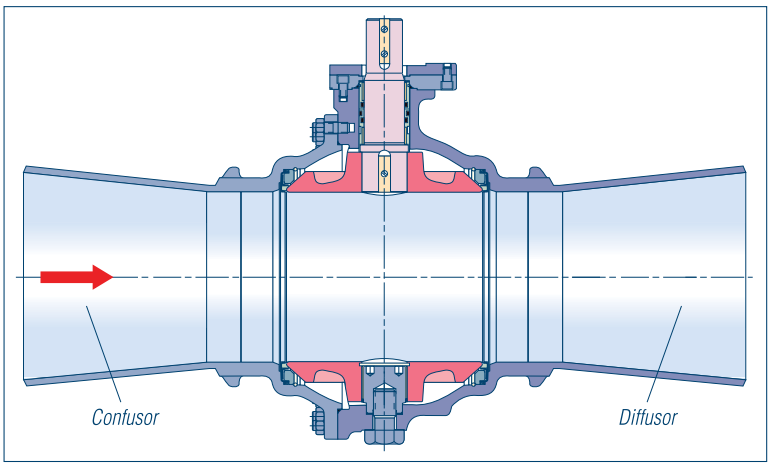

Variation 2: ball valve reduced with welding cones

Dimension: DN 800/700

ξ-value 0,189
k_V-value: 58 919 m^3/h

Observe the relation:

$$\frac{kv_{full\ port}}{kv_{redued\ port}} = \frac{\sqrt{\zeta_{full\ port}}}{\sqrt{\zeta_{redued\ port}}}$$

The pressure/temperature-diagram helps you to choose the optimal ball valve

Pressure-temperature limits

The PT-diagram clearly shows what impact the material of body, sealing, bearings and screws has on the application range of the ball valve.
Place your operating point in the diagram field to see if the safety margins meet your requirements.
A decreasing operating pressure in the nominal pressure range increases the field of applications in the temperure range.
If you choose your ball valve in this way you optimize the economy of the valve.

Indicated temperatures are limiting values which have always to be considered in connection with the medium and the respective operational pressure. Admitted continuous temperatures are always within these limiting values:

1) Pressure/temperature ratings acc. to. EN 1092 / EN 10213

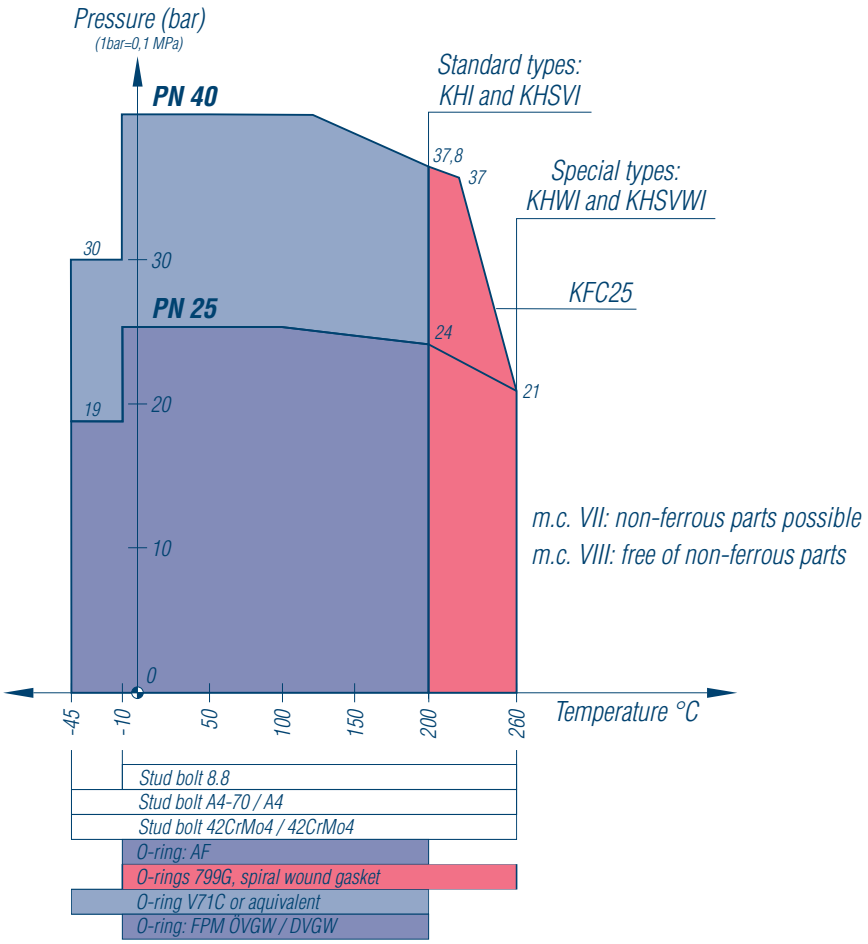

CAST STEEL 1.0619 [1]), material code number VII

In the interest of technical progress, design and dimensions are subject to modification

Pressure/temperature-diagram

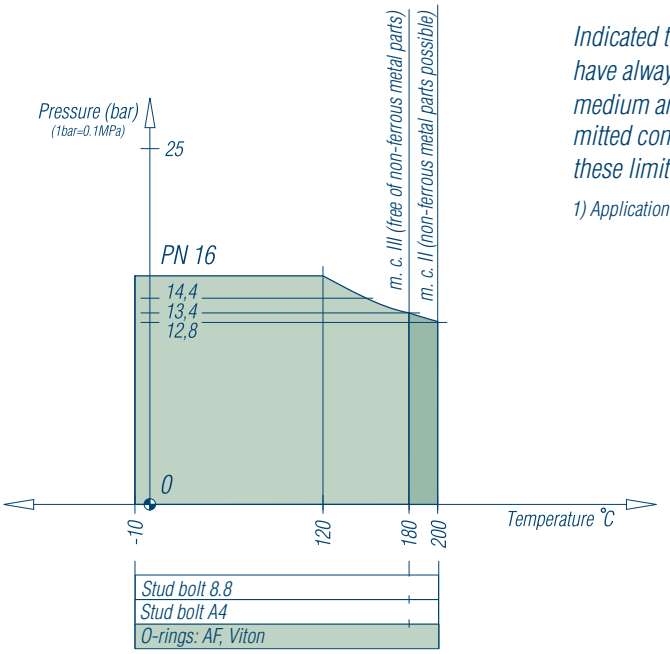

Indicated temperatures are limiting values which have always to be considered in connection with the medium and the respective operational pressure. Admitted continuous temperatures are always within these limiting values:

1) Application limits acc. to ISO 7005-2

CAST IRON 0.6025 [1], material code II and III

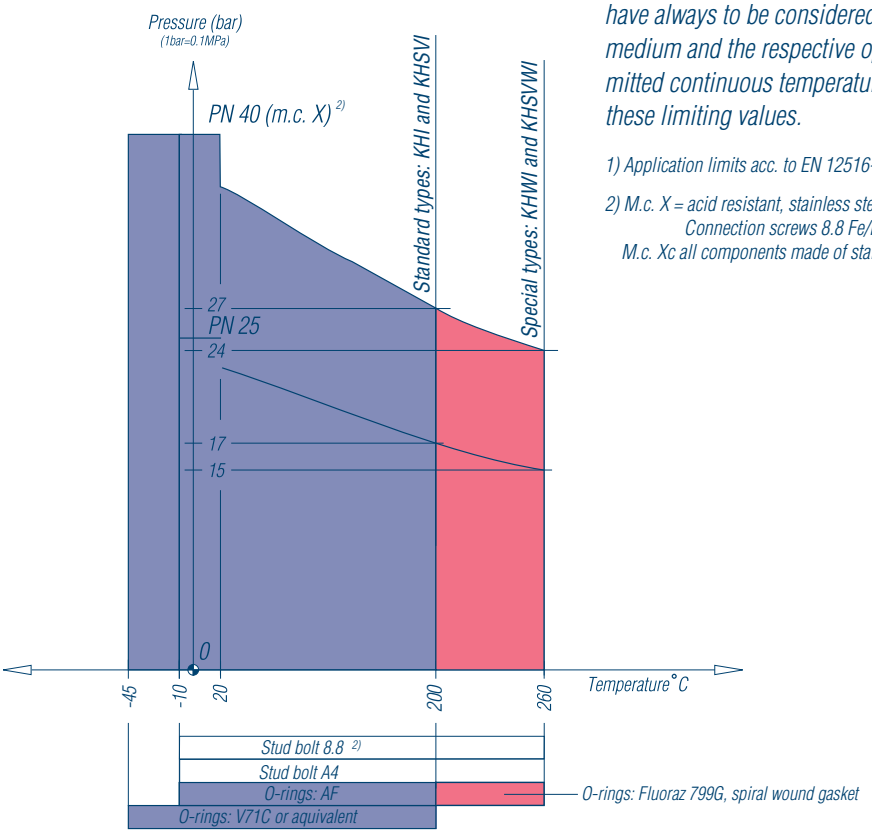

Indicated temperatures are limiting values which have always to be considered in combination with the medium and the respective operational pressure. Admitted continuous temperatures are always within these limiting values.

1) Application limits acc. to EN 12516-1 (14 E0)

2) M.c. X = acid resistant, stainless steel:
Connection screws 8.8 Fe/Ni 5P (or aquivalent)
M.c. Xc all components made of stainless steel!

STAINLESS STEEL 1.4408, 1.4404 [1], material code Xc, X

KLINGER Ballostar ball valves
Summary of types

Assembly of big sized Klinger Ballostar KHSVI ball valves

	Ball valve				Connections		
Page	Type	DN	PN	Material	Type	Standard 1)	Dimensions 2)
Ball valves with flange – full bore							
13	KHI	150 – 200	25, 40	cast steel	flange	EN 1092-1	EN 558-1/GR 12
14	KHI	150 – 350	25, 40	cast steel	flange	EN 1092-1	EN 558-1/GR 12
15	KHI	150 – 400	25, 40	acid resistant stee l	flange	EN 1092-1	EN 558-1/GR 12
16	KHI	400 – 800	25, 40	cast steel	flange	EN 1092-1	EN 558-1/GR 12
Ball valves with welding ends – full bore							
17	KHSVI	150–200	40	cast steel	butt weld end	EN 12627	EN 12982/GR 63 3)
18	KHSVI	150–1000	40	cast steel	butt weld end	EN 12627	EN 12982/GR 63 3)
Ball valves with flanges – reduced bore							
19	KHI	200/150	16	cast iron	flange	EN 1092-2	EN 558-1/GR 27 4)
20	KHI	150/125–250/200	25	cast steel	flange	EN 1092-1	EN 558-1/GR 27 4)
20	KHI	150/125–250/200	25	acid resistant steel	flange	EN 1092-1	EN 558-1/GR 27 4)
21	KHI	150/125–300/250	25	cast steel	flange	EN 1092-1	EN 558-1/GR 27 4)
21	KHI	150/125–300/250	25	acid resistant steel	flange	EN 1092-1	EN 558-1/GR 27 4)
Ball valves with welding ends – reduced bore							
22	KHSVI	Cones in all sizes and reductions	40	cast steel	butt weld end	EN 12627	
23	KHSVI	300/250–800/700	40	cast steel	butt weld end	EN 12627	EN 12982/GR 63 3)

Note:
1) *Flange dimensions see page 24*
2) *Face-to-face dimensions acc. to EN 558-1/GR 12 identical to ISO 5752-R12*
3) *End-to-end dimensions acc. to EN 12982/GR 63 identical to ANSI B 16.10*
4) *Face-to-face dimensions acc. to EN 558-1/GR 27 identical to DIN 3202-F5*

KLINGER Ballostar® KHI ball valves

Ball valves with flanges, full bore
flange connection acc. to EN 1092-1 / PN25 or PN40
material: cast steel

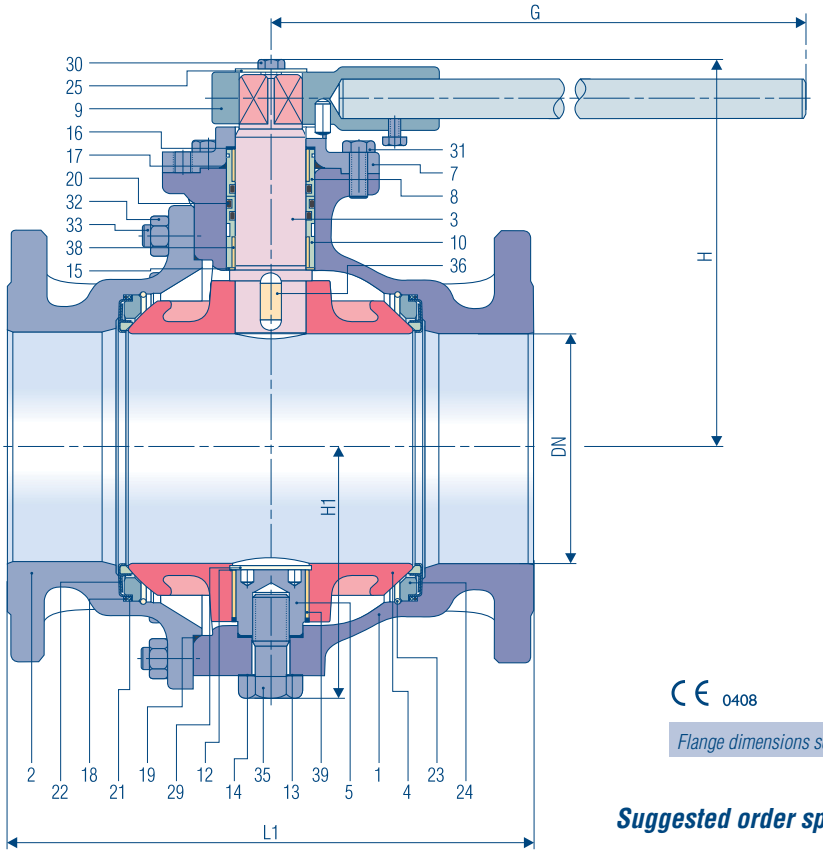

KHI
150 – 200

PN 25
material-code VII

PN 40
material-code VII

Face-to-face dimensions acc. to EN 558-1/GR 12

CE 0408

Flange dimensions see page 24

Part name	Material code VII
1 Body	GP 240 GH
2 Flanged end	GP 240 GH
3 Operating stem	1.4104
4 Ball	EN-JS 1030 Fe/Cr30f, mt
5 Trunnion	1.4104
7 Flange	GP 240 GH
8 Bush insert OT	1.0553
9 Valve lever	St / polyamid
10 Bush insert UT	1.0553
12 Washer	1.4401
13 Gasket	soft nickel
14 Gasket	soft nickel
15 Cushions joint	KFC-25
16 Cushions joint	K-SIL
17 O-ring	AF 3)
18 O-ring	AF 3)
19 O-ring	AF 3)

Part name	Material code VII
20 O-ring	AF 3)
21 U-section sleeve	KFC-25
22 Sealing element	VII-KFC
23 Circlip	1.4401.07
24 Supporting ring	0.6020
25 Washer	St
29 Locking ring	1.4122 1)
30 Hexagon bolt	5.6
31 Hexagon bolt	5.6
32 Hexagon nut	8
33 Stud bolt	8.8
35 Hexagon bolt	1.0540
36 Feather key	1.0052.07
38 Bearing bush	St/Bz/Flon 2)
39 Bearing bush	St/Bz/Flon 2)

1) not applicable for DN 150
2) material code VIII: AISI 316L P90
3) O-ring compound of standard version

Suggested order specification

Ball valve PN 25 or PN 40
Split body, full bore with supported ball, two independent sealing elements, main sealing element KFC is metallically enclosed on three sides, operating stem made of acid resistant steel, maintenance-free operating-stem seal made of AF, pressure possible on both sides, body and end piece made of cast steel GP 240 GH, overall length acc. to EN 558–1/GR12, operated with hand lever. Leak tightness through the bore tested acc. to EN ISO 12266-1 P12. External leak tightness testet acc to EN ISO 12266-1 P11. Strength determined acc. to EN ISO 12266-1 P10.

Make: KLINGER
Type: KHI-VII
for DN 150–200

PN 25, PN 40					
Overall dimension in mm					
DN d	L1	H	H1	G	weight in kg
150	394	263	166	800	85
200	457	340	218	1000	150

Ordering example:
KHI 150-VII – KFC/AF, PN 25
KHI 150-VII – KFC/AF, PN 40

Pressure- and temperature limits see page 10–11
actuators see page 7

KLINGER Ballostar® KHI ball valves

Ball valves with flange, full bore
Flange connection acc. to EN 1092-1 / PN 25 or PN 40
Material: cast steel

KHI
150 – 350

PN 25
material-code VII

PN 40
material-code VII

Face-to-face dimensions acc. to EN 558-1/GR 12

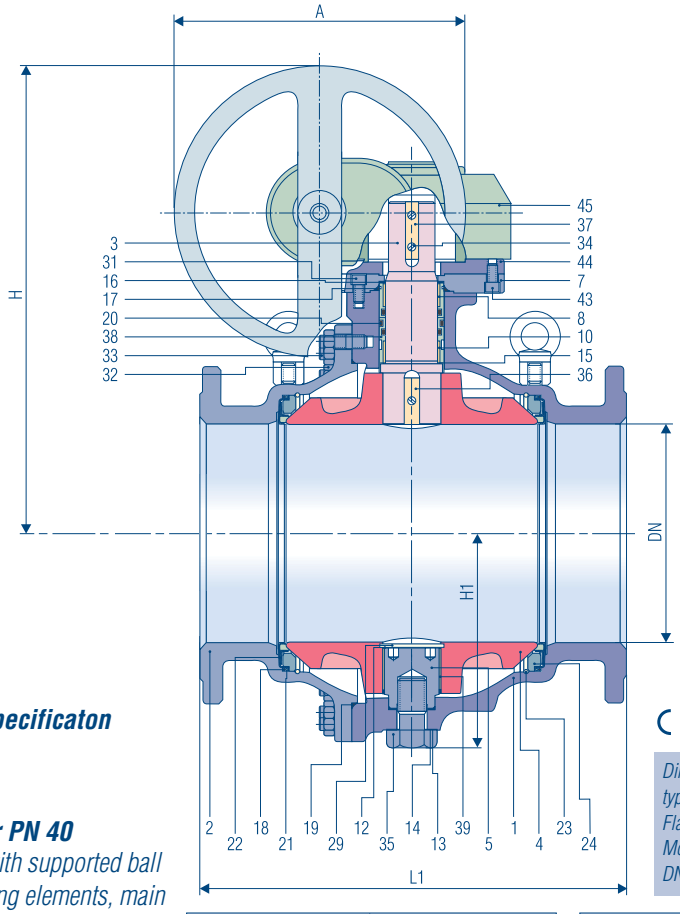

CE 0408

Dimension A, H: depending on gear type Torques see summary page 7
Flange dimensions see page 24
Mounting eyelet for DN 350 and DN 400

Suggested order specificaton

Ball valve PN 25 or PN 40
Split body, full bore with supported ball two independent sealing elements, main sealing element KFC is metallically enclosed on three sides, operating stem made of acid resistant steel, maintenance-free operating stem-sealing made of AF, pressure possible on both sides, body and end piece made of cast steel GP 240 GH, overall dimension acc. to EN 558–1/GR 12, operated via worm gear.
Leak tightness through the bore tested acc. to EN ISO 12266-1 P12.
External leak tightness testet acc to EN ISO 12266-1 P11.
Strength determined acc. to EN ISO 12266-1 P10.

Make: KLINGER
Type: KHI-VII, for DN 150 –350

Ordering example:
KHI 150-VII – KFC/AF, PN 25
KHI 150-VII – KFC/AF, PN 40
with mechanical gear

Pressure- and temperature limits see page 10–11
actuators see page 7

Part names	Material code VII
1 Body	GP 240 GH
2 Flanged end- piece	GP 240 GH
3 Operating stem	1.4104
4 Ball	EN-JS 1030 Fe/Cr30f, mt
5 Trunnion	1.4104
7 Flange	GP 240 GH
8 Bush insert OT	1.0553
10 Bush insert UT	1.0553
12 Washer	1.4401 1)
13 Gasket	soft nickel
14 Gasket	soft nickel
15 Cushions joint	KFC-25
16 Cushions joint	K-SIL
17 O-ring	AF 3)
18 O-ring	AF 3)
19 O-ring	AF 3)
20 O-ring	AF 3)
21 U-section sleeve	KFC-25
22 Sealing element	VII-KFC

Part names	Material code VII
23 Circlip	1.4401.07
24 Supporting ring	0.6020
29 Locking ring	1.4122 1)
31 Hex. head cap screw	10.9
32 Hexagon nut	8
33 Stud bolt	8.8
34 Slotted cheese head screw	A4
35 Hexagon bolt	1.0540
36 Feather key	1.0052.07
37 Feather key	1.0052.07
38 Bearing bush	St/Bz/Flon 2)
39 Bearing bush	St/Bz/Flon 2)
43 Hex. head cap screw	A4
44 Flange	St
45 Gear drive	

1) not applicable for DN 150
2) material code VIII: AISI316L P90
3) O-ring compound of standard version

PN 25
Overall dimension in mm

DN	L1	H1	H4)	A4)	weight in kg 5)	weight in kg 6)
150	394	166	473	315	85	98
200	457	218	600	400	150	170
250	533	260	591	315	220	266
300	610	290	616	315	380	426
350	686	353	749	400	580	645

4) measurements relate to AUMA-gear

PN 40
Overall dimension in mm

DN	L1	H1	H4)	A4)	weight in kg 5)	weight in kg 6)
150	394	166	525	400	85	103
200	457	218	600	400	160	180
250	533	260	591	315	240	286
300	610	290	658	400	410	468
350	686	353	749	400	620	685

5) without gear
6) complete with AUMA-gear

In the interest of technical progress, design and dimensions are subject to modification

KLINGER Ballostar® KHI ball valves

Ball valves with flange, full bore
Flange connection acc. to EN1092-1 / PN 25 or PN 40
material: acid resistant steel

KHI
150 – 400

PN 25
material-code Xc

PN 40
material-code X

Face-to-face dimensions acc. to EN 558-1/GR 12

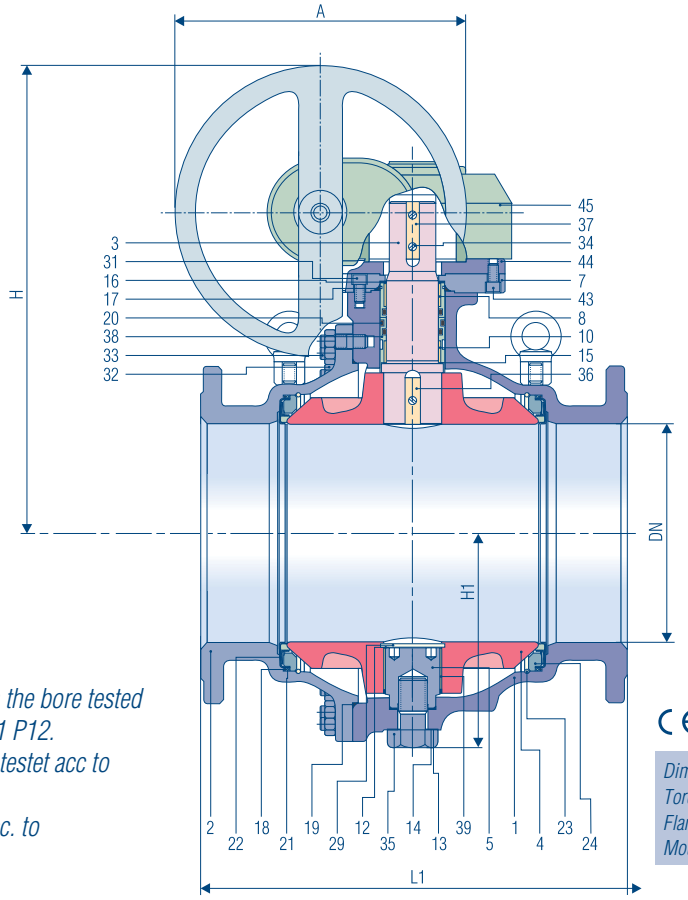

CE 0408

Dimension A, H: depending on gear type
Torques see summary page 7
Flange dimensions see page 24
Mounting eyelet for DN 350 only

Leak tightness through the bore tested acc. to EN ISO 12266-1 P12.
External leak tightness testet acc to EN ISO 12266-1 P11.
Strength determined acc. to EN ISO 12266-1 P10.

Part name	Material code Xc
1 Body	1.4408
2 Flanged end	1.4408
3 Operating stem	1.4401
4 Ball	1.4408 4)
5 Trunnion	1.4401
7 Flange	1.4408
8 Bush insert OT	1.4401
10 Bush insert UT	1.4401 soft nitriding
12 Washer	1.4401 1)
13 Gasket	soft nickel
14 Gasket	soft nickel
15 Cushions joint	KFC-25
16 Cushions joint	K-SIL
17 O-ring	AF 3)
18 O-ring	AF 3)
19 O-ring	AF 3)
20 O-ring	AF 3)
21 U-section sleeve	KFC-25

Part name	Material code Xc
22 Sealing element	X-KFC
23 Circlip	1.4401.07
24 Supporting ring	1.4408
29 Locking ring	1.4122 1)
31 Hex. head cap screw	A4
32 Hexagon nut	A4 2)
33 Stud bolt	A4–70 2)
34 Slotted cheese hd screw	1.4401
35 Hexagon bolt	1.4571
36 Feather key	1.4401
37 Feather key	1.4401
38 Bearing bush	AISI316L P90
39 Bearing bush	AISI316L P90
43 Hex. head cap screw	A4
44 Flange	1.4401
45 Gear drive	

1) Not applicable for DN 150
2) Material 8.8 Fe/Ni 5P (or E2P with m.c. X)
3) O-ring compound of standard version
4) Hollow ball with guiding only at DN 400

PN 25
Overall dimension in mm

DN	L1	H1	H 5)	A 5)	weight in kg 6)	weight in kg 7)
150	394	166	473	315	85	98
200	457	218	600	400	150	170
250	533	260	591	315	220	266
300	610	290	616	315	380	426
350	686	353	749	400	580	645
400	762	370	769	400	800	913

5) measurements relate to Auma-gear

PN 40
Overall dimension in mm

DN	L1	H1	H 5)	A 5)	weight in kg 6)	weight in kg 7)
150	394	166	525	400	85	103
200	457	218	600	400	160	180
250	533	260	591	315	240	286
300	610	290	658	400	410	468
350	686	353	749	400	620	685
400	762	370	769	400	856	970

6) without gear 7) complete with AUMA-gear

Suggested order specification

Ball valve PN 25
Split body, full bore with supported ball, two independent sealing elements, main sealing element KFC is metallically enclosed on three sides, operating stem made of stainless, acid resistant steel 1.4401 maintenance-free operating stem sealing made of AF, pressure possible on both sides, body and end piece made of acid resistant steel 1.4408, overall length to EN 558-1/GR12, operated via worm gear.

Make: KLINGER
Type: KHI-Xc, for DN 150–400

Ordering example:
KHI 150-Xc – KFC/AF, PN 25
with mechanical gear

Pressure- and temperature limits see page 10–11
actuators see page 7

KLINGER Ballostar® KHI ball valves

Ball valves with flange, full bore
flange connection acc. to EN1092-1 / PN 25 or PN 40
material: cast steel

KHI
400 – 800

PN 25
material-code VII

PN 40
material-code VII

Face-to-face dimensions
acc. to EN 558-1/GR 12

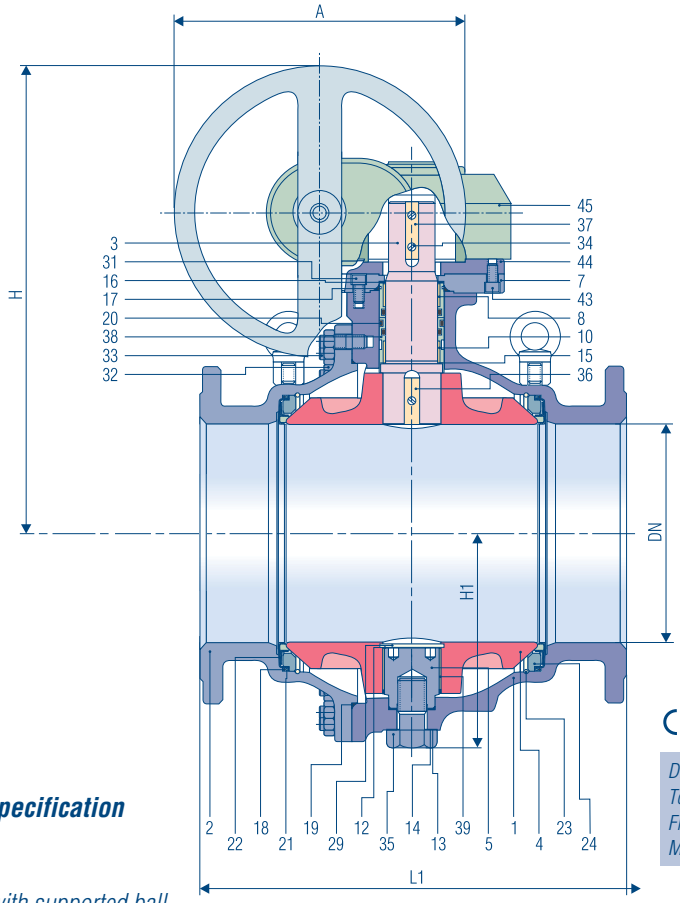

CE 0408

Dimension A, H: depending on gear type
Torques see summary page 7
Flange dimensions see page 24
Mounting eyelet for all sizes

Suggested order specification

Ball valve PN 25
Split body, full bore with supported ball two independent sealing elements, main sealing element KFC is metallically enclosed on three sides, operating stem made of acid resistant steel, maintenance-free operating stem seal made of AF, pressure possible on both sides, body and end piece made of cast steel GP 240 GH, overall dimension acc. to EN 558–1/GR 12, operated via worm gear.
Make: KLINGER
Type: KHI-VII
for DN 400–800

Leak tightness through the bore tested acc. to EN ISO 12266-1 P12.
External leak tightness testet acc to EN ISO 12266-1 P11.
Strength determined acc. to EN ISO 12266-1 P10.

Ordering example:
KHSVI 400-VII – KFC/AF, PN 25 with mechanical gear

Pressure- and temperature limits see page 10–11
actuators see page 7

Part names	Material code VII
1 Body	GP 240 GH
2 Flanged end	GP 240 GH
3 Operating stem	1.4104
4 Ball	EN-JS 1030 Fe/Cr30f, mt
5 Trunnion	1.4104
7 Flange	St
8 Bush insert OT	1.0553
10 Bush insert UT	1.0553
12 Washer	1.4401 1)
13 Gasket	Weichnickel
14 Gasket	Weichnickel
15 Cushions joint	KFC-25
16 Cushions joint	K-SIL
17 O-ring	AF 3)
18 O-ring	AF 3)
19 O-ring	AF 3)
20 O-ring	AF 3)
21 U-section sleeve	KFC-25
22 Sealing element	VII-KFC

Part names	Material code VII
23 Circlip	1.4401.07
24 Supporting ring	0.6020
29 Locking ring	1.4122 1)
30 Cheese headed screw	A4
31 Hex. head cap screw	10.9
32 Hexagon nut	8
33 Stud bolt	8.8
34 Slotted cheese head screw	A4
35 Hexagon bolt	1.0540
36 Feather key	1.0052.07
37 Feather key	1.0052.07
38 Bearing bush	St/Bz/Flon 2)
39 Bearing bush	St/Bz/Flon 2)
43 Hex. head cap screw	10.9
44 Flange	St
45 Gear drive	

1) not applicable for DN 150
2) material VIII: AISI316L P90
3) O-ring compound of standard version

PN 25
Overall dimension in mm

DN	L1	H1	H 4)	A 4)	weight in kg 5)	weight in kg 6)
400	762	370	769	400	800	913
500	914	465	870	400	1200	1326
600	1067	528	1100	630	1750	1955
700	1245	640	1264	630	3100	3354
800	1372	710	1460	800	4850	5242

3) measurements relate to Auma-gear

PN 40
Overall dimension in mm

DN	L1	H1	H 4)	A 4)	weight in kg 5)	weight in kg 6)
400	762	370	769	400	856	970
500	914	465	996	630	1330	1535
600	1067	528	1100	630	1863	2068
700	1245	640	1364	800	3350	3742
800	1372	710	1460	800	5055	5447

4) without gear 5) complete with AUMA-gear

In the interest of technical progress, design and dimensions are subject to modification

KLINGER Ballostar® KHSVI ball valves

Ball valves with butt welding ends, full bore
Material: cast steel

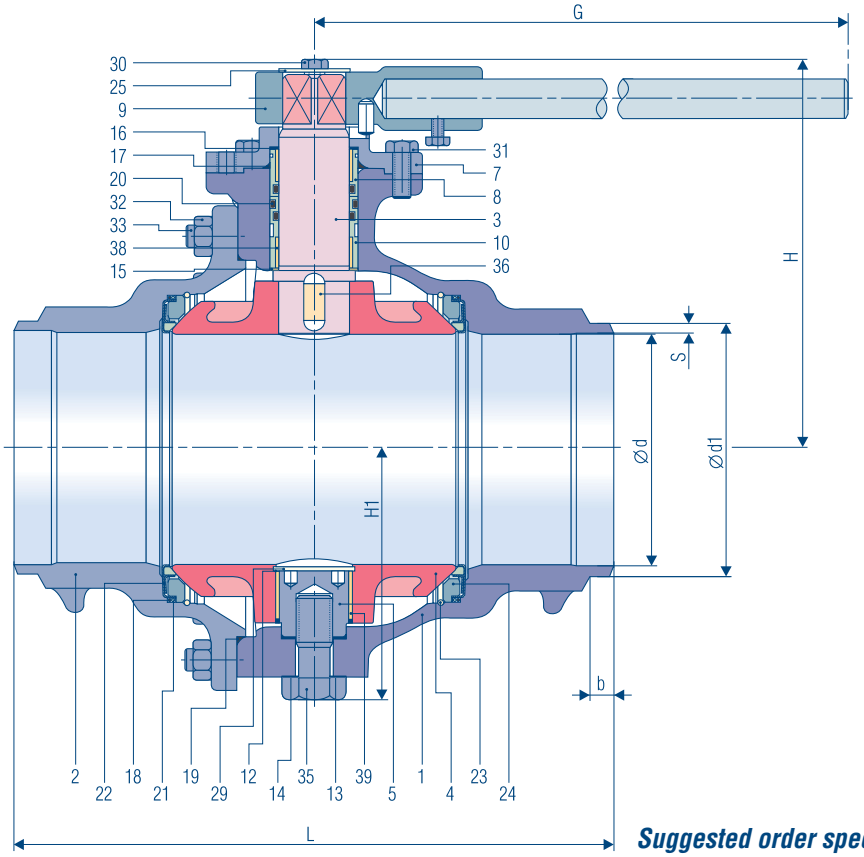

KHSVI 150 – 200

PN 40
material-code VII

End-to-end dimensions acc. to EN 12982/GR 63 resp ANSI B16.10

Part name	Material code VII
1 Body	GP 240 GH
2 End piece	GP 240 GH
3 Operating stem	1.4104
4 Ball	EN-JS 1030 Fe/Cr30f, mt
5 Trunnion	1.4104
7 Flange	GP 240 GH
8 Bush insert OT	1.0553
9 Lever	St/PA yellow
10 Bush insert UT	1.0553
12 Washer	1.4401
13 Gasket	soft-nickel
14 Gasket	soft-nickel
15 Cushions joint	KFC-25
16 Cushions joint	K-SIL
17 O-ring	AF 3)
18 O-ring	AF 3)
19 O-ring	AF 3)

Part name	Material code VII
20 O-ring	AF 3)
21 U-section sleeve	KFC-25
22 Sealing element	VII-KFC
23 Circlip	1.4401 K
24 Supporting ring	0.6020
25 Washer	St
29 Locking ring	1.4122 1)
30 Hexagon bolt	5.6
31 Hexagon bolt	5.6
32 hexagon nut	8
33 stud bolt	8.8
35 Hexagon bolt	1.0540
36 Feather key	1.0052.07
38 Bearing bush	St/Bz/Flon 2)
39 Bearing bush	St/Bz/Flon 2)

1) Not applicable for DN 150
2) Materialf VIII: 38 AISI316L/P90 39 AISI316L/P90
3) O-ring compound of standard version

Suggested order specification

Ball valve PN 40
Split body, full bore with supported ball, two independent elements, main sealing element KFC is metallically enclosed on three sides, operating stem made of acid resistant steel,maintenance-free operating-stem seal made of AF, pressure possible on both sides, body and end piece made of steel GP 240 GH, overall length acc. to ANSI B16.10 class 300 and EN 12982/GR 63, butt welding ends acc. to customer request.
Make: KLINGER
Type: KHSVI-VII, for DN 150–200

Leak tightness through the bore tested acc. to EN ISO 12266-1 P12.
External leak tightness testet acc to EN ISO 12266-1 P11.
Strength determined acc. to EN ISO 12266-1 P10.

Ordering example:
KHSVI 150-VII – KFC/AF, PN 40

Pressure- and temperature limits see page 10–11
actuators see page 7

PN 40					
Overall dimension in mm					
DN	L	H	H1	G	weight ca. kg
150	457	263	166	800	68
200	521	340	218	1000	130

PN 40				
Connection dimensions in mm „ Standard“				
DN	d	d1	s	b
150	150	168,3	6,65	20
200	200	219,1	8,05	20

KLINGER Ballostar® KHSVI ball valves

Ball valves with butt welding ends, full bore
Material: cast steel

KHSVI
150 – 1000

PN 40
material-code VII

End-to-end dimensions
acc. to EN 12982/GR 63
resp ANSI B16.10

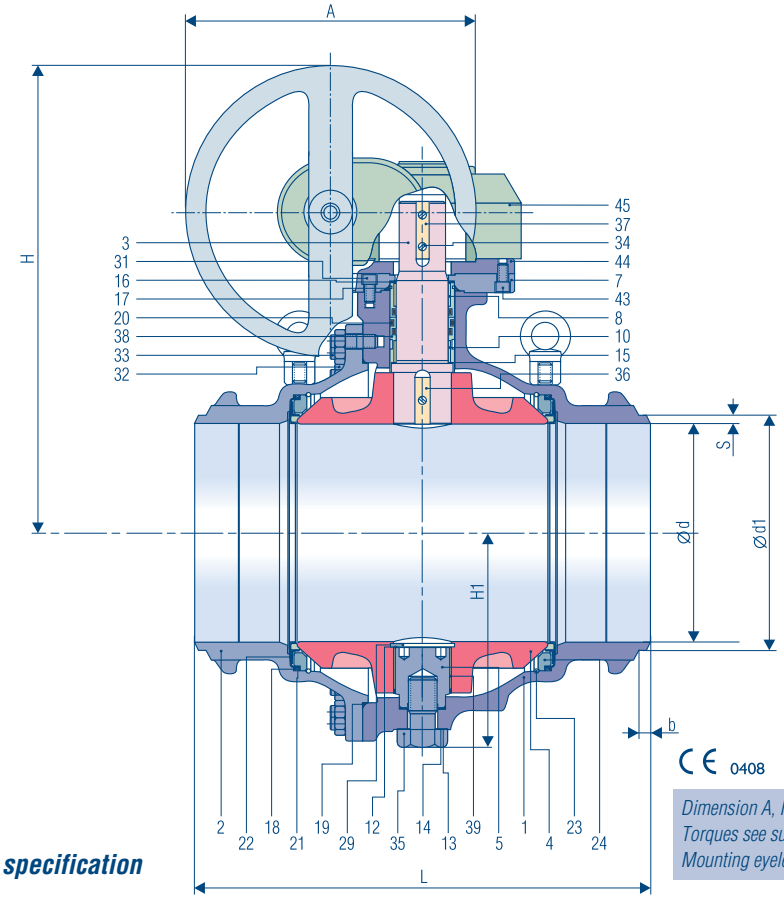

CE 0408

Dimension A, H: depending on gear type
Torques see summary page 7
Mounting eyelet for DN 350 to DN 800

Suggested order specification

Ball valve PN 40
Split body, full bore with supported ball, two independent sealing elements, main sealing element KFC is metallically enclosed on three sides, operating stem made of acid resistant steel, maintenance-free operating-stem seal made of AF, pressure possible on both sides, body and end piece made from cast steel, overall length acc. to ANSI B16.10 class 300 and EN 12982/GR 63, butt welding ends acc. to customer request, operated via worm gear.
Make: KLINGER
Type: KHSVI-VII, for DN 150 – 1000

Leak tightness through the bore tested acc. to EN ISO 12266-1 P12.
External leak tightness testet acc to EN ISO 12266-1 P11.
Strength determined acc. to EN ISO 12266-1 P10.

Ordering example:
KHSVI 350-VII – KFC/AF, PN 40 with mechanical gear

Pressure- and temperature limits see page 10 – 11
actuators see page 7

Part names	Material code VII
1 Body	GP 240 GH
2 End piece	GP 240 GH
3 Operating stem	1.4104
4 Ball	EN-JS 1030 Fe/Cr30f, mt
5 Trunnion	1.4104
7 Flange	St
8 Bush insert OT	1.0553
10 Bush insert UT	1.0553
12 Washer	1.4401
13 Gasket	soft nickel
14 Gasket	soft nickel
15 Cushions joint	KFC-25
16 Cushions joint	K-SIL
17 O-ring	AF 3)
18 O-ring	AF 3)
19 O-ring	AF 3)
20 O-ring	AF 3)
21 U-section sleeve	KFC-25

Part names	Material code VII
22 Sealing element	VII-KFC
23 Circlip	1.4401 K
24 Supporting ring	0.6020
29 Locking ring	1.4122 1)
31 Hex-s. head cap screw	10.9
32 Hexagon nut	8
33 Stud bolt	8.8
34 Cheese head bolt	A4
35 Hexagon bolt	1.0540
36 and 37 feather key	1.0052.07
38 Bearing bush	St/Bz/Flon 2)
39 Bearing bush	St/Bz/Flon 2)
43 Hex-s. head cap screw	A4
44 Flange	St
45 Gear	

1) Not applicable for DN 150
2) Material VIII: 38 AISI316L/P90 39 AISI316L/P90
3) O-ring compound of standard version

										PN 40
DN	Overall dimension in mm				Connection dimensions in mm "Standard"				weight	
	L	H1	H	A	d	d1	s	b	in kg 4)	in kg 5)
150	457	166	525	400	150	168,3	6,65	20	68	86
200	521	218	600	400	200	219,1	8,05	20	130	150
250	559	260	591	315	250	273	8,50	20	200	246
300	635	290	658	400	300	323,9	9,45	20	355	413
350	762	353	749	400	334	355,6	10,80	20	555	620
400	838	370	769	400	386	406.4	10,20	25	760	873
500	991	465	996	630	476	508	16,00	25	1150	1355
600	1143	528	1100	630	575	610	17,5	25	1700	1905
700	1346	640	1364	800	676	711	17,5	25	3000	3392
800	1524	710	1460	800	775	813	19	25	4700	5092
1000	1981	860	1670	800	1000	1020	10	25	7480	8240

4) without gear 5) complete with AUMA-gear

In the interest of technical progress, design and dimensions are subject to modification

KLINGER Ballostar® KHI ball valves

Ball valves with flanges, reduced bore flange connection acc. to EN1092-2 / PN 16, material: cast iron

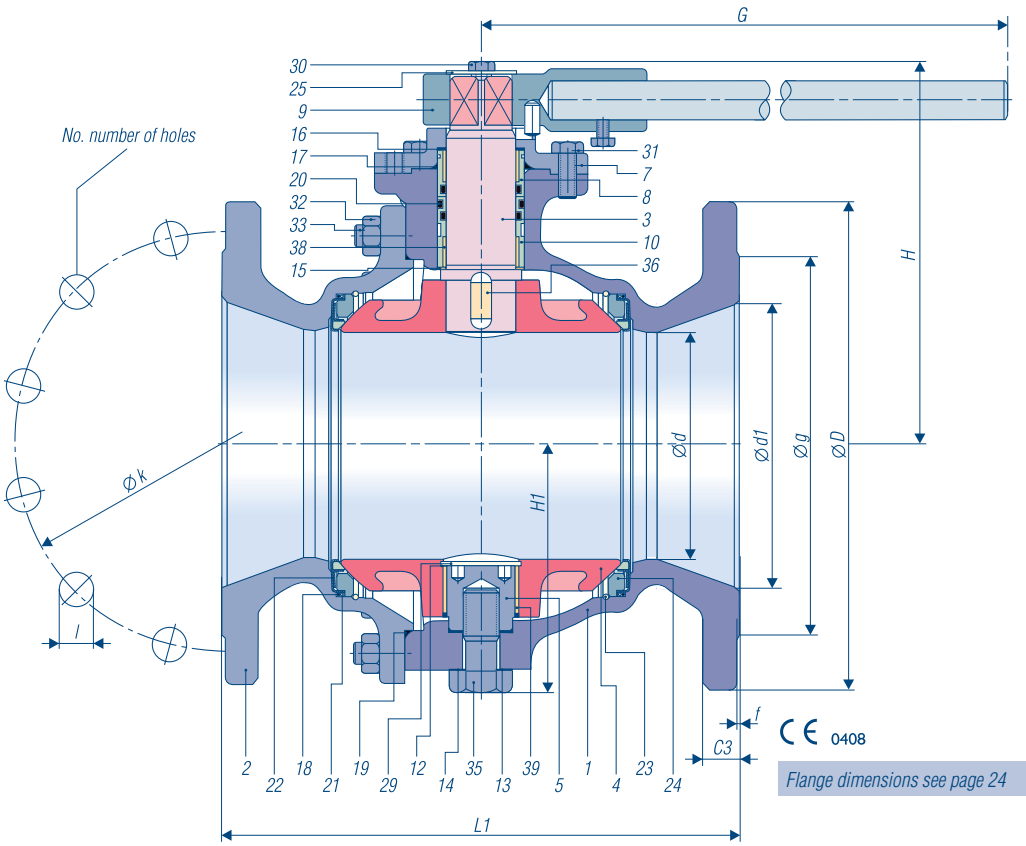

KHI 200/150

PN 16

material-code III

Face-to-face dimensions acc. to EN 558-1/GR 27

Flange dimensions see page 24

Part names	Material code III
1 Body	EN-JL 1040
2 Flanged end	EN-JL 1040
3 Operating stem	1.4104
4 Ball	EN-JS 1030 Fe/Cr30 f, mt
5 Trunnion	1.4104
7 Flange	GP 240 GH
8 Bush insert OT	1.0553
9 Lever	St/PA rot
10 Bush insert UT	1.0553
12 Washer	1.4401
13 Gasket	Soft nickel
14 Gasket	Soft nickel
15 Cushions joint	KFC-25
16 Cushions joint	K-SIL
17 O-ring	AF 2)
18 O-ring	AF 2)

Part names	Material code III
19 O-ring	AF 2)
20 O-ring	AF 2)
21 U-section sleeve	KFC 25
22 Sealing element	VII-KFC
23 Circlip	1.4401 K
24 Supporting ring	0.6020
25 Washer	St
29 Locking ring	1.4122 1)
30 Hexagon bolt	5.6
31 Hexagon bolt	5.6
32 Hexagon nut	5
33 Stud bolt	5.6
35 Hexagon bolt	8.8
36 Feather key	1.0052.07
38 Bearing bush	AISI 316 L / P 90
39 Bearing bush	AISI 316 L / P 90

1) Not applicable for DN 150
2) O-ring compound of standard version

PN 16													
Overall dimension in mm													
d1	d	L1	H	G	H1	D	c3	k	L	no	g	f	weight ca. kg
200	150	400	263	650	166	340	30	295	22	12	268	3	90

Suggested order specification

Ball valve PN 16

Split body, reduced bore with supported ball, two independent sealing elements, main sealing element KFC is metallically enclosed on three sides, operating stem made of acid resistant steel, maintenance-free operating stem seal made of AF, pressure possible on both sides, body and flanged end made of cast iron EN-JL 1040, overall length acc. to EN 558–1/GR 27.
Make: KLINGER
Type: KHI-III, for DN 200/150

Leak tightness through the bore tested acc. to EN ISO 12266-1 P12.
External leak tightness testet acc to EN ISO 12266-1 P11.
Strength determined acc. to EN ISO 12266-1 P10.

Ordering example:
KHI 200/150-III – KFC/AF, PN 16

Pressure- and temperature limits see page 10–11
actuators see page 7

KLINGER Ballostar® KHI ball valves

Ball valves with flanges, reduced bore
flange connection acc. to EN1092-1 / PN 25
material: cast steel, acid resistant steel

KHI 150/125 – 250/200

PN 25
material-code VII, Xc

Face-to-face dimensions acc. to EN 558-1/GR 27

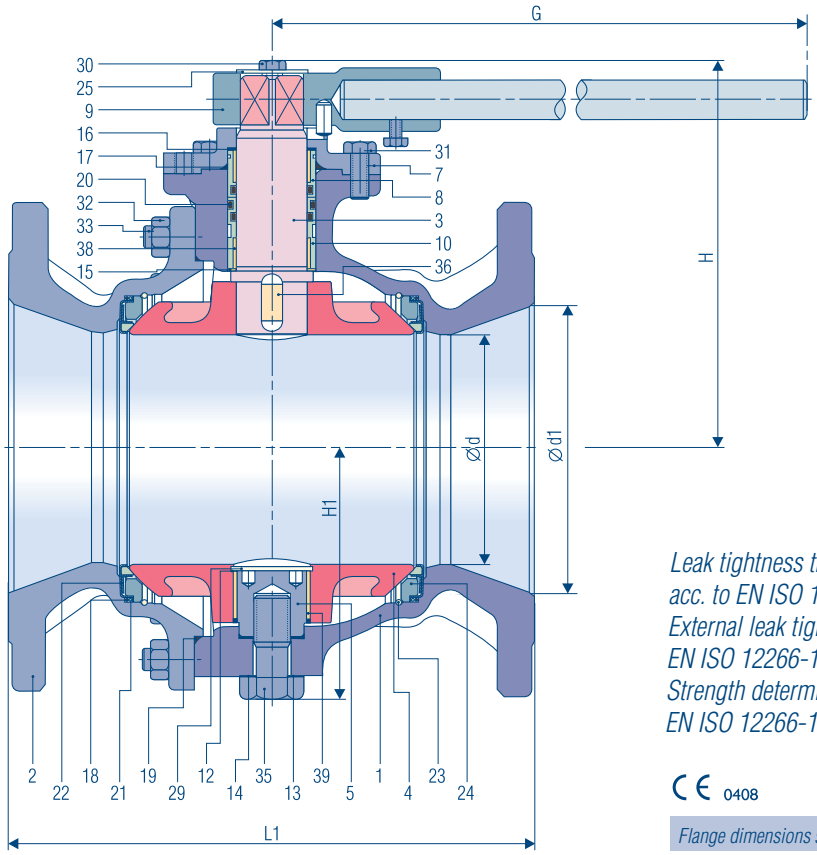

Leak tightness through the bore tested acc. to EN ISO 12266-1 P12.
External leak tightness testet acc to EN ISO 12266-1 P11.
Strength determined acc. to EN ISO 12266-1 P10.

CE 0408

Flange dimensions see page 24

Suggested order specification

Ball valve PN 25
Split body, reduced bore with supported ball, two independent sealing elements, main sealing element KFC is metallically enclosed on three sides, operating stem made of acid resistant steel 1.4408, maintenance-free operating stem made of AF, pressure possible on both sides, body and end piece made of cast steel GP 240 GH or stainless, acid-resistant steel 1.4408, overall length acc. to EN 558–1/GR 27.
Make: KLINGER
Type: KHI-VII, Xc
for DN 150/125–250/200

Ordering example:
KHI 150/125-VII – KFC/AF, PN 25
KHI 150/125-Xc – KFC/AF, PN 25

Part name	Material code VII	Material code Xc
1 Body	GP 240 GH	1.4408
2 Flanged end	GP 240 GH	1.4408
3 Operating stem	1.4104	1.4401
4 Ball	EN-JS 1030 Fe/Cr30f, mt	1.4408
5 Trunnion	1.4104	1.4401
7 Flange	GP 240 GH	1.4401
8 Bush insert OT	1.0553	1.4401 soft nitriding
9 Lever	St/polyamid	St/poly-amid
10 Bush insert UT	1.0553	1.4401 soft nitriding
12 Washer	1.4401 1)	1.4401 1)
13 Gasket	soft nickel	soft nickel
14 Gasket	soft nickel	soft nickel
15 Cushions joint	KFC-25	KFC-25
16 Cushions joint	K-SIL	K-SIL
17 O-ring	AF 3)	AF 3)
18 O-ring	AF 3)	AF 3)
19 O-ring	AF 3)	AF 3)

Part name	Material code VII	Material code Xc
20 O-ring	AF 3)	AF 3)
21 U-section sleeve	KFC-25	KFC-25
22 Sealing element	VII-KFC	X-KFC
23 Circlip	1.4401.07	1.4401.07
24 Supporting ring	0.6020	1.4408
25 Washer	St	1.4571
29 Locking ring	1.4122 1)	1.4122 1)
30 Hexagon bolt	5.6	A4
31 Hexagon bolt	5.6	A4
32 Hexagon nut	8	A4
33 Stud bolt	8.8	A4
35 Hexagon bolt	1.0540	1.4571
36 Feather key	1.0052.07	1.4401
38 Bearing bush	St/Bz/Flon 2)	AISI316L P90
39 Bearing bush	St/Bz/Flon 2)	AISI316L P90

1) Not applicable for DN 150/125+200/150
2) Material VIII: AISI316L P90
3) O-ring compound of standard version

PN 25					
Overall dimension in mm					
DN d/d1	L1	H	H1	G	weight in kg
150/125	350	155	251	650	76
200/150	400	167	263	800	105
250/200	450	217	340	1000	177

Pressure- and temperature limits see page 10–11
actuators see page 7

In the interest of technical progress, design and dimensions are subject to modification

KLINGER Ballostar® KHI ball valves

Ball valves with flanges, reduced bore
Flange connection acc. to EN1092-1 / PN 25
Material: cast steel, acid resistant steel

KHI 150/125 – 300/250

PN 25

material-code VII, Xc

Face-to-face dimensions acc. to EN 558-1/GR 27

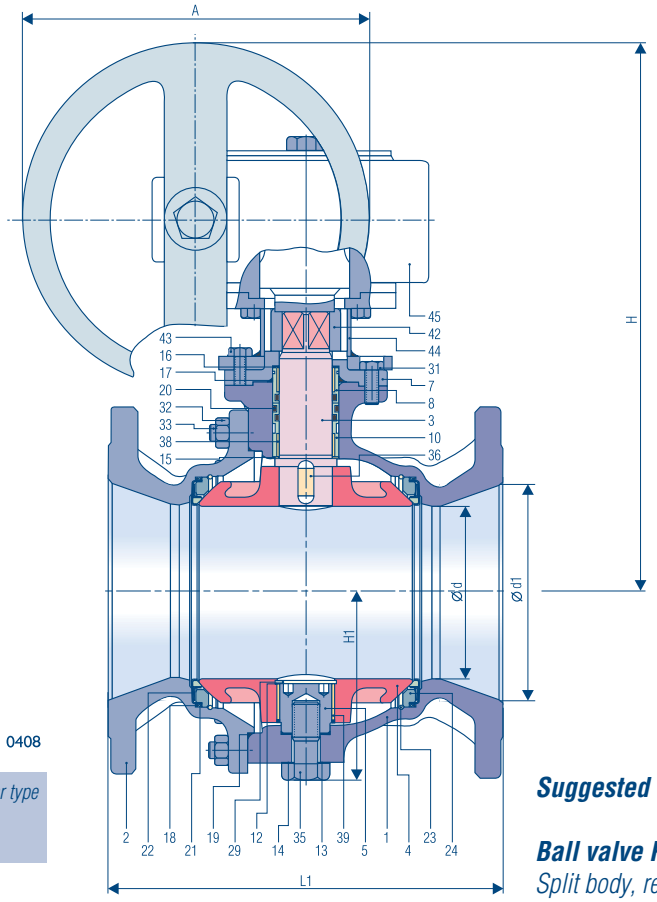

CE 0408

Dimension A, H: depending on gear type
Torques see summary page 7
Flange dimensions see page 24

Part names	Material code	
	VII	Xc
1 Body	GP 240 GH	1.4408
2 Flanged end	GP 240 GH	1.4408
3 Operating stem	1.4104	1.4401
4 Ball	EN-JS 103 0 Fe/Cr30f, mt	1.4408
5 Trunnion	1.4104	1.4401
7 Flange	GP 240 GH	1.4408
8 Bush insert OT	1.0553	1.4401 soft nitrited
10 Bush insert UT	1.0553	1.4401 soft nitrited
12 Washer	1.4401 1)	1.4401 1)
13 Gasket	soft-nickel	soft-nickel
14 Gasket	soft-nickel	soft-nickel
15 Cushions joint	KFC-25	KFC-25
16 Cushions joint	K-SIL	K-SIL
17 O-ring	AF 2)	AF 2)
18 O-ring	AF 2)	AF 2)
19 O-ring	AF 2)	AF 2)
20 O-ring	AF 2)	AF 2)

Part names	Material code	
	VII	Xc
21 U-section sleeve	KFC-25	KFC-25
22 Sealing element	VII-KFC	X-KFC
23 Circlip	1.4401.07	1.4401.07
24 Supporting ring	0.6020	1.4408
29 Locking ring	1.4122 1)	1.4310
31 Hexagon bolt	5.6	A4
32 Hexagon nut	5	A4
33 Stud bolt	5.6	A4
35 Hexagon bolt	1.0540	A4
36 Feather key	1.0052.07	1.4401
38 Bearing bush	St/Bz/Flon 2)	AISI316L P90
39 Bearing bush	St/Bz/Flon 2)	AISI316L P90
42 Coupling	St	St/FeNi
43 Hexagong headed bolt	10.9	A4
44 Flange	St	1.4401
45 Gear drive		

1) Not applicable for DN 150/125+200/150
2) O-ring compound of standard version

PN 25						
DN d/d1	L1	H1	H	A	weight in kg 3)	weight in kg 4)
150/125	350	155	475	315	76	106
200/150	400	167	606	400	105	135
250/200	450	217	599	315	177	217
300/250	500	268	676	400	254	294

3) without gear 4) complete with AUMA-gear

Suggested order specification

Ball valve PN 25

Split body, reduced bore with supported ball, two independent sealing elements, main sealing element KFC is metallically enclosed on three sides, operating stem made of acid resistant steel 1.4401, maintenance-free operating stem made of AF, pressure possible from both sides, body and end piece made of cast steel GP 240 GH or acid resistant steel 1.4408, overall length acc. to EN 558–1/GR 27, operated via worm gear.
Make: KLINGER
Type: KHI-VII, Xc, for DN 150/125–300/250

Leak tightness through the bore tested acc. to EN ISO 12266-1 P12.
External leak tightness testet acc to EN ISO 12266-1 P11.
Strength determined acc. to EN ISO 12266-1 P10.

Ordering example:
KHI 150/125-VII – KFC/AF, PN 25
KHI 150/125-Xcl – KFC/AF, PN 25
with mechanical gear

KLINGER Ballostar® KHSVI ball valves

Ball valves with extended butt welding ends full bore with reducing cones material: cast steel

KHSVI

PN 40

material-code VII

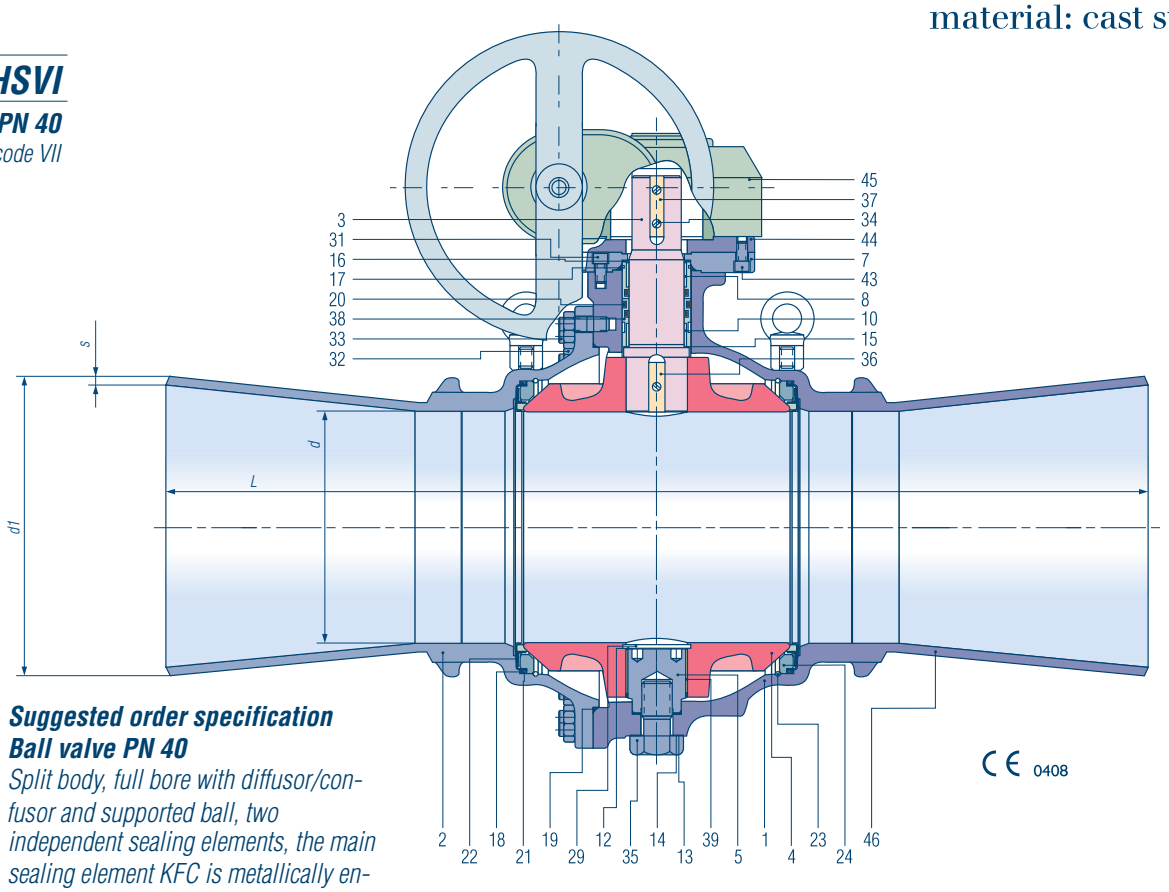

Suggested order specification
Ball valve PN 40

Split body, full bore with diffusor/confusor and supported ball, two independent sealing elements, the main sealing element KFC is metallically enclosed on three sides, operating stem made of acid resistant steel, maintenance-free operation stem made of AF, pressure possible on both sides, body and end piece made of cast steel, butt weld end acc. to customer request, operated via worm gear.
Make : KLINGER
Type: KHSVI-VII

Leak tightness through the bore tested acc. to EN ISO 12266-1 P12.
External leak tightness testet acc to EN ISO 12266-1 P11.
Strength determined acc. to EN ISO 12266-1 P10.

Ball valves with extended buttweld-ends are available in all sizes. Upon customer request also available with reduced piece acc. to DIN 2616 T2 or in special sizes.

Part names	Material code VII
1 Body	GP 240 GH
2 End piece	GP 240 GH
3 Operating stem	1.4104
4 Ball	EN-JS 1030 Fe/Cr30f, mt
5 Trunnion	1.4104
7 Flange	St
8 Bush insert OT	1.0553
10 Bush insert UT	1.0553
12 Washer	1.4401
13 Gasket	Soft-nickel
14 Gasket	Soft-nickel
15 Cushions joint	KFC-25
16 Cushions joint	K-SIL
17 O-ring	AF 2)
18 O-ring	AF 2)
19 O-ring	AF 2)
20 O-ring	AF 2)
21 U-section sleeve	KFC-25

Part names	Material code VII
22 Sealing element	VII-KFC
23 Circlip	1.4401.07
24 Supporting ring	0.6020
29 Locking ring	1.4122
30 Hex. head cap screw	A4
31 Hex. head cap screw	10.9
32 Hexagon nut	8
33 Stud bolt	8.8
34 Slotted cheese head screw	A4
35 Hexagon bolt	1.0540
36 Feather key	1.0052.07
37 Feather key	1.0052.07
38 Bearing bush	St/Bz/Flon 1)
39 Bearing bush	St/Bz/Flon 1)
44 Flange	St
45 Gear drive	
46 Reducing cone	St

1) Material VIII, AISI316L P90
2) O-ring compound of standard version

DN	d	d1	s	L	weight in kg 3)	weight in kg 4)
600/500	475	630	7	2007	1264	1424
700/600	585	720	8	2363	1860	2020
800/700	686	820	8	2566	3184	3480
900/800	782	920	10	2744	4960	5256
1000/800	782	1020	10	2744	4978	5274
1200/800	782	1220	12	2946	5140	5436
1200/1000	980	1220	12	3403	8250	9480

3) without gear 4) complete with AUMA-gear

In the interest of technical progress, design and dimensions are subject to modification

KLINGER Ballostar® KHSVI ball valves

Ball valves with butt welding ends
reduced bore
Material: cast steel

KHSVI 300/250 – 800/700

PN 40
material-code VII

End-to-end dimensions acc. to EN 12982/GR 63

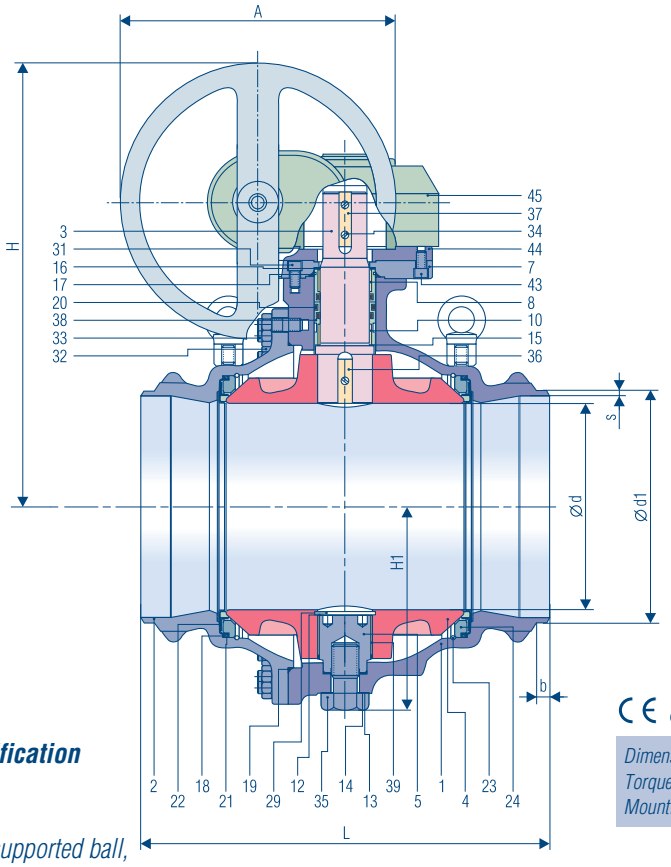

CE 0408

Dimension A, H: depending on gear type
Torques see summary page 7
Mounting eyelet from DN 350

Suggested order specification

Ball valve PN 40

Split body, full bore with supported ball, two independent sealing elements, main sealing element KFC is metallically enclosed on three sides, operating stem made of acid resistant steel, maintenance-free operating-stem sealing made of AF, pressure possible on both sides, body and end piece made of cast steel, overall length acc. to ANSI B16.10 Class 300 and EN12982/GR 63, butt-weld ends acc. to customer request, operated via worm gear.

Leak tightness through the bore tested acc. to EN ISO 12266-1 P12.
External leak tightness testet acc to EN ISO 12266-1 P11.
Strength determined acc. to EN ISO 12266-1 P10.

Make : KLINGER
Type: KHSVI-VII, for DN 300/250–800/700

Ordering example:
KHSVI 300/250-VII – KFC/AF, PN 40
with mechanical gear

Part names	Material code VII
1 Body	GP 240 GH
2 End piece	GP 240 GH
3 Operating stem	1.4104
4 Ball	EN-JS 1030 Fe/Cr30f, mt
5 Trunnion	1.4104
7 Flange	St
8 Bush insert OT	1.0553
10 Bush insert UT	1.0553
12 Washer	1.4401
13 Gasket	soft nickel
14 Gasket	soft nickel
15 Cushions joint	KFC-25
16 Cushions joint	K-SIL
17 O-ring	AF 2)
18 O-ring	AF 2)
19 O-ring	AF 2)
20 O-ring	AF 2)
21 U-section sleeve	KFC-25

Part names	Material code VII
22 Sealing element	VII-KFC
23 Circlip	1.4401.07
24 Supporting ring	0.6020
29 Locking ring	1.4122
30 Cheese headed screw	A4
31 Cheese headed screw	10.9
32 Hexagon nut	8
33 Stud bolt	8.8
34 Cheese headed screw	A4
35 Hexagon bolt	1.0540
36 Feather key	1.0052.07
37 Feather key	1.0052.07
38 Bearing bush	St/Bz/Flon 1)
39 Bearing bush	St/Bz/Flon 1)
44 Flange	St
45 Gear drive	

1) Material VIII: AISI316L P90
2) O-ring compound of standard version

PN 40										
Overall dimension in mm										
DN	d	d1	b	s	L	H1	H	A	weight in kg 3)	weight in kg 4)
300/250	250	323,9	20	9,45	635	260	651	400	232	272
350/300	300	355,6	20	10,8	762	290	859	400	405	445
400/350	350	406,4	25	10,2	838	353	750	400	610	650
500/400	380	508	25	16	991	370	769	400	860	973
600/500	475	610	25	17,5	1143	465	1010	630	1280	1371
700/600	585	711	25	17,5	1346	528	1114	630	1850	2055
800/700	676	813	25	19	1524	640	1368	800	3350	3510

3) without gear 4) complete with AUMA-gear

Flange dimensions

According to EN 1092-1*)
Flange type 21 (integral)
Flange facing type B1 (raised face)

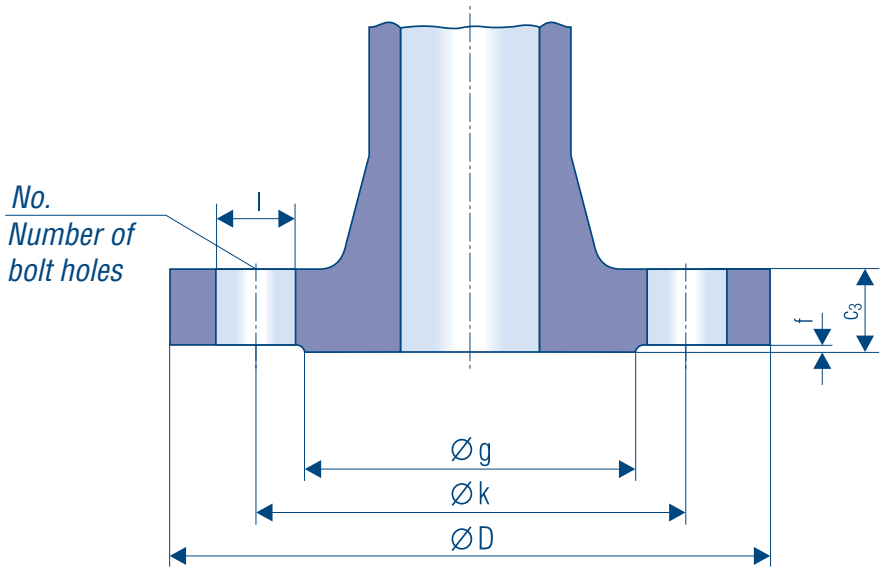

Flange dimensions for PN 25

Size	Connection					Flange facing	
DN	D	c_3	k	l	Nr.	g	f
150	300	28	250	26	8	218	3
200	360	30	310	26	12	278	3
250	425	32	370	30	12	335	3
300	485	34	430	30	16	395	4
350	555	38	490	33	16	450	4
400	620	40	550	36	16	505	4
500*)	730	44	660	36	20	615	4
600*)	845	46	770	39	20	720	5
700*)	960	50	875	42	24	820	5
800*)	1085	54	990	48	24	930	5

*) Dimensions acc. to DIN 2544

Flange dimensions for PN 40

Size	Connection					Flange facing	
DN	D	c_3	k	l	Nr.	g	f
150	300	28	250	26	8	218	3
200	375	34	320	30	12	285	3
250	450	38	385	33	12	345	3
300	515	42	450	33	16	410	4
350	580	46	510	36	16	465	4
400	660	50	585	39	16	535	4
500*)	755	52	670	42	20	615	4
600*)	890	60	795	48	20	735	5
700*)	995	64	900	48	24	840	5
800*)	1140	72	1030	56	24	960	5

*) Dimensions acc. to DIN 2545

Special design

Special design

Our main concern is the customer and his needs. In close cooperation we create innovative and individual solutions in order to satisfy every individual demand. Among other things we offer special designs and accessories as follows:

- *Regulation blind (equal percentage, linear, u.a.)*
- *GKHI for gas application (ÖVGW approved): DN 150-800*
- *Vacuum application up to 10^{-6} mbar l/s*
- *Valves for Benton'Air® pressurised slurry tunnel drilling machines*
- *Oxygen application*
- *Metal seated valves for abrasive medium*
- *Steam application*
- *Heating jacket*
- *Bypass design*
- *Drain-, air-relief- and flushing-connections*
- *Underground installation (extended operating stem)*
- *Fully welded design*

Drain cocks for ball valves DN 150 – 1000 PN 25/40

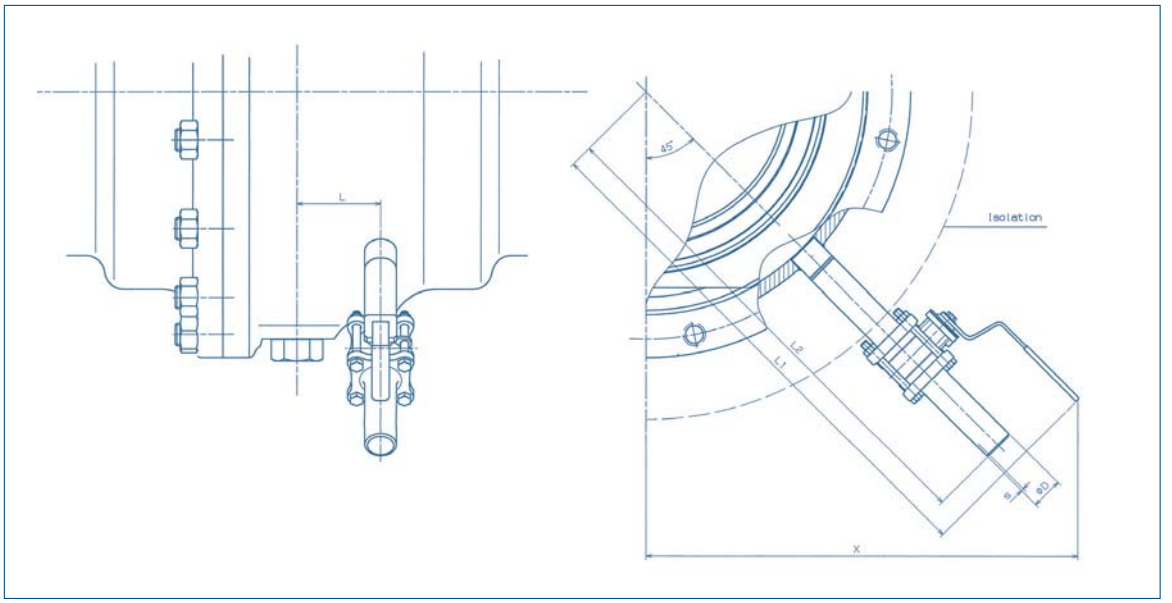

Table of measurements (in mm)

DN	L	L1	L2	X	D	s	Type
150	50	407	382	355	26.9	2.3	KHA-SL 20 VIII PN100
200	75	444	420	381	26.9	2.3	KHA-SL 20 VIII PN100
250	80	509	484	429	33.7	2.6	KHA-SL 25 VIII PN63
300	90	545	520	455	33.7	2.6	KHA-SL 25 VIII PN63
350	110	575	550	475	33.7	2.6	KHA-SL 25 VIII PN63
400	115	608	583	499	33.7	2.6	KHA-SL 25 VIII PN63
450	130	870	663	706	60.3	2.9	KHA-SL 50 VIII PN40
500	130	870	663	706	60.3	2.9	KHA-SL 50 VIII PN40
600	140	950	743	763	60.3	2.9	KHA-SL 50 VIII PN40
700	140	1031	824	820	60.3	2.9	KHA-SL 50 VIII PN40
800	250	1071	864	848	60.3	2.9	KHA-SL 50 VIII PN40
1000	250	1252	1065	985	77	3.5	KHA-SL 65 VIII PN40

- *The drain cock should only be opened if the ball valve is closed.*
- *To avoid injury it is recommended to connect the drain cock to a drain pipe.*
- *Applied for superheated water it has to be considered that, depending on the valve size, the draining procedure lasts for some time.*
- *With the drain cock it is possible to check the "block & bleed" function, i. e. the ball valve can be tested whether it is leaktight.*

Fully welded ball valves for pre-insulation: DN 150-800

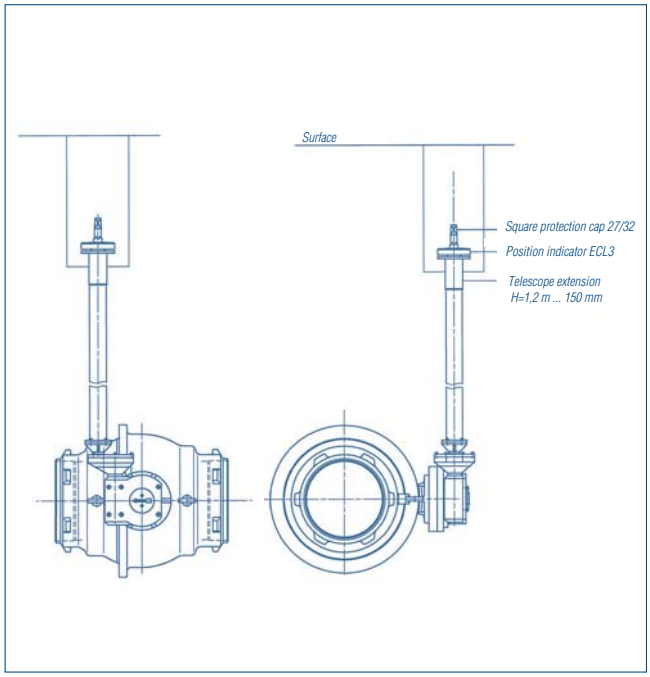

Ballostar ball valves pre-insulated, shown before and during the installation into a district heating network

These ball valves are approved acc. to EN 488 (underground installation), upon request even pre-insulated – see adjoining pictures. If required equipped with telescopic stem extension.

Stem extension

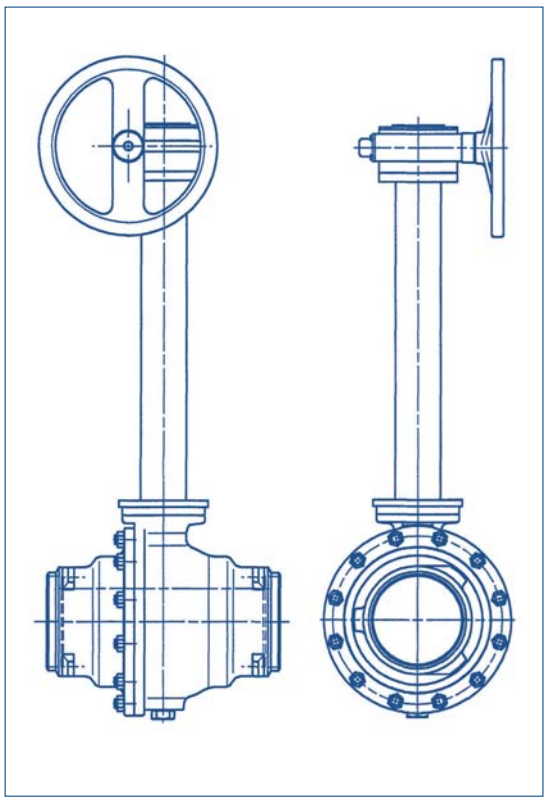

Special design

Underground version

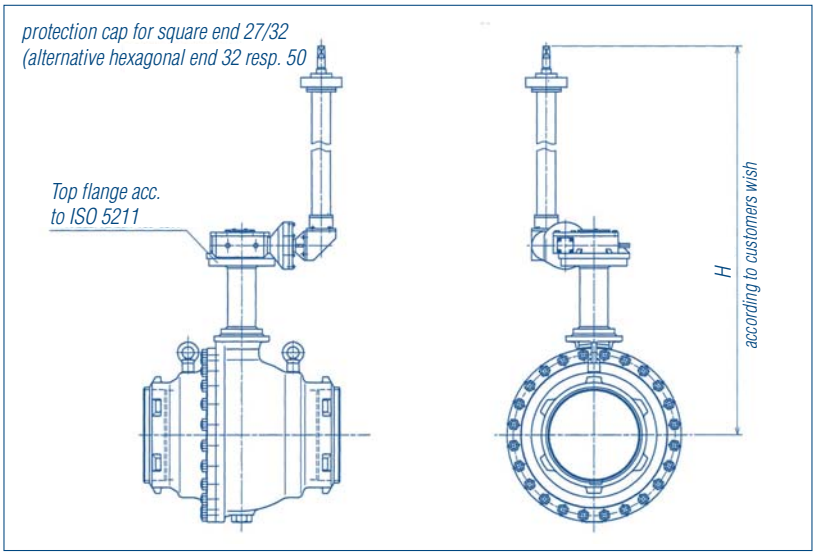

Ball valves KHSVI 150 – 800 with insulating stem extension and buried fitting "RIGID" or "TELESCOPE" and mechanical gear plus position indicator

Underground / shaft installation – operation variations

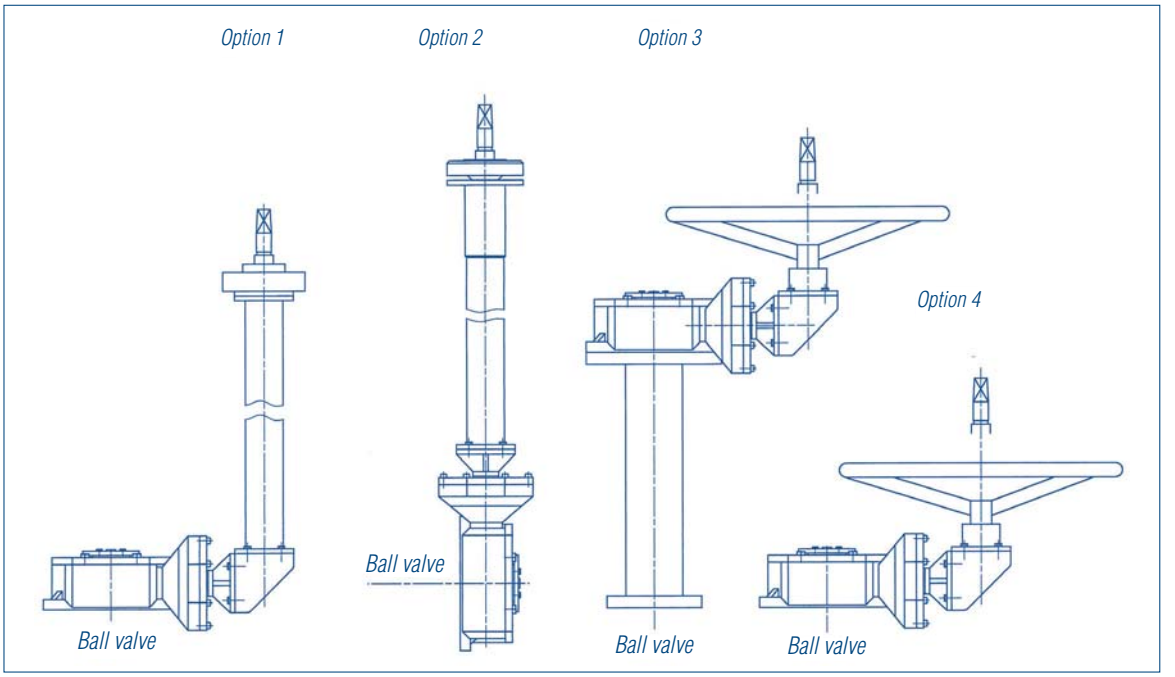

Option 1
Mechanical gear with angular gear and position indicator rigid or telescope extension
square27/32 operated with T-key DIN3223 type C (alternatively hexagon square 32)

Option 2
Mechanical gear with rigid or telescope extension
square 27/32 operated with T-key DIN3223 type C (alternatively hexagon square 32)

Option 3
Mechanical gear with rigid operation-stem extension with angular gear and hand-wheel operation or square 27/32

Option 4
Mechanical gear with angular gear, hand-wheel operation resp. square 27/32

KLINGER Ballostar® KHI ball valves

Metal seated M

Economically optimised and future-proofed because of modular design

Due to the trunnion mounted ball, single sided loads, which are acting on sealing elements, are avoided. This guarantees high leak tightness and increases the service life.
Worn sealing elements can be substituted on the spot, economically, without a specialist or KLINGER technician. Regarding stock keeping it means that you only have to store sealing elements or sealing kits and not complete ball valves.
Ballostar ball valves which are already on stock can be fitted supplimentary with metal sealing elements. This ensures consistency of design throughout the plant.

Special surface coatings of the ball

- *Hard-chrome*
- *Chemical nickel*
- *Wolframcarbid*

Special surface coatings should be choosed acc. to requirements of the operating media.

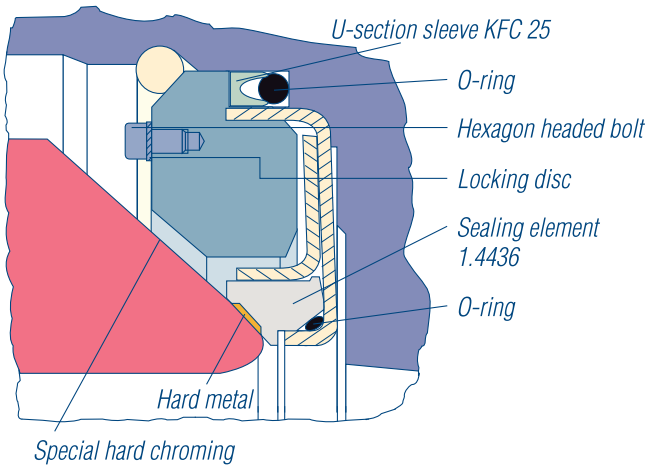

Table of chemical resistance

*The **recommendations** contained in the table should help you to choose suitable materials and types. We cannot assume a guarantee since function and durability of the products are largely dependent on factors over which the manufacturer has no influence.*
*In the event of specific conditions of approval, these must be observed. **Please contact us for any support.** Whenever solids are named in the list, what is meant are their aqueous suspensions.*

Names of metallic materials,codes and code numbers according solutions or to DIN-standard.

EN-JL1040	grey cast iron acc. to EN 1561
GP 240 GH	heat resisted cast steel acc. to EN 10213
1.4401	nickel-chromium molybdenum steel
1.4408	nickel-chromium molybdenum steel
1.4571	stabilized nickel-chromium molybdenum steel

Names of materials for seals:

AF	AFLAS
K-Flon	Klingerflon® PTFE
KFC	Klingerflon® carbon-reinforced
Metal	1.4436 sealing ring coated with STELLITE

Explanation of symbols:

for metallic materials:
0 = practically resistant, removal up to 2,4 g/ m²/day
1 = fairly resistant, removal 2,4 – 24 g/m²/day
2 = hardly resistant, removal 24 – 72 g/ m²/day
3 = not resistant, removal over 72 g/m²//day
– = not tested or not common

for sealing material:
• = suitable
– = not suitable

Abbreviations:
Kp. = boiling point
sat. sol. = saturated solution
aq. Sol.. = aqueous solution
conc. = concentrated

Fluid	Chemical formular	Concentration And temperature		Materials for seals				Metallic materials			Material code
		%	°C	AF	KFC	K-Flon	Metall	EN-JL 1040	St GP 240 GH	1.4401/1.4408/ 1.4571	
Aceton	CH_3COCH_3		20	–	•	•	•	0	0	0	all
Acetylen	C_2H_2			•	•	•	•				III, VIII, X, Xc
Air, dry				•	•	•	•	0	0	0	all
Alum	$KAl(SO_4)_2$	10	20	•	•	•	•	–	–	0	X, Xc
Alum	$KAl(SO_4)_2$	10	100	•	•	•	•	–	–	0	X, Xc
Aluminium acetate	$(CH_3COO)_3Al$			–	•	•	•	3	3	0	X, Xc
Aluminium ethylate	$Al(OC_2H_5)_2$			–	•	•	•	0	0	0	alle
Aluminium chlorate	$Al(ClO_3)_3$			•	•	•	•	–	–	0	X, Xc
Aluminium fluoride	AlF_3			•	•	•	–	0	0	3	III, VIII
Aluminium oxyde	Al_2O_3			–	•	•	•	0	0	0	alle
Ammonium bicarbonate	$(NH_4)HCO_3$			–	•	•	•	0	0	0	III, VIII, X, Xc
Ammonium chloride	NH_4Cl	5	20	•	•	•	•	1	1	0	all
Ammonium chloride	NH_4Cl	10	20	–	•	•	•	1	1	0	all
Ammonium chloride	NH_4Cl	10	100	–	•	•	•	3	3	0	X, Xc
Ammonium chloride	NH_4Cl	50	20	–	•	•	•	1	1	0	all
Ammonium diphosphate	$(NH_2)_2HPO_4$			–	•	•	•	1	1	0	III, VIII, X, Xc
Ammonium carbonate	$(NH_4)_2CO_3$		Kp	–	•	•	•	2	2	0	X, Xc
Ammonium nitrate	NH_4NO_3		20	–	•	•	•	2	2	0	X, Xc
Ammonium sulphate	$(NH4)_2SO_4$		20	–	•	•	•	3	3	0	X, Xc
Ammonium hydroxyde	NH_4OH	10	20	•	•	•	•	0	0	0	III, VIII, X, Xc
Ammonium hydroxyde	NH_4OH	10	100	•	•	•	•	0	0	0	III, VIII, X, Xc
Aniline	$C_6H_5NH_2$			•	•	•	•	0	0	0	all
Arsenic acid	H_3AsO_4			•	•	•	•	2	2	0	X, Xc
Asphalt (tar)				•	•	•	•	–	–	0	X, Xc
Beer				•	•	•	•	0	0	0	all

Fluid	Chemical formular	Concentration and temperature		Materials for seals				Metallic materials			Material code
		%	°C	AF	KFC	K-Flon	Metall	EN-JL 1040	St GP 240 GH	1.4401/1.4408/ 1.4571	
Benzene	C_6H_6			–	●	●	●	0	0	0	all
Benzine				●	●	●	●	3	3	0	X, Xc
Bleaching liquor (chloride of lime)				●	●	●	●	–	–	1	X, Xc
Borax	$Na_2B_40_7$ 10 H_20			●	●	●	●	–	–	0	X, Xc
Boric acid	H_3BO_3	4	20	●	●	●	●	2	2	0	X, Xc
Boric acid	H_3BO_3	4	100	●	●	●	●	2	2	0	X, Xc
Boric acid	H_3BO_3	100	100	●	●	●	●	2	2	0	X, Xc
Butane	C_4H10			●	●	●	●	0	0	0	all
Buttermilk			20	●	●	●	●	–	–	0	X, Xc
Butyl acetate	$CH_3C00C_4H_9$			–	●	●	●	0	0	0	all
Butyl alcohol	C_4H_9OH			–	●	●	●	0	0	0	all
Calcium bisulphite	$Ca(HS\ 0_3)_2$		20	●	●	●	●	2	3	0	X, Xc
Calcium bisulphite	$Ca(HS\ 0_3)_2$		200	–	●	●	●	2	3	0	X, Xc
Calcium chloride	$CaCl_2$		20	●	●	●	●	1	1	0	X, Xc
Calcium chloride	$CaCl_2$		100	●	●	●	●	2	2	1	X, Xc
Calcium hydroxide (milk of lime)	$Ca(OH)_2$			●	●	●	●	0	0	0	all
Calcium hypochlorite	$Ca(ClO)_2$			●	●	●	●	2	2	1	X, Xc
Calcium sulphate	$CaSO_4$			–	●	●	●	0	0	0	all
Carbon dioxyde, dry	CO_2	bis	150	–	●	●	●	0	0	0	all
Carbon dioxyde, dry	CO_2		400	–	–	●	●	0	0	0	VII, X, Xc
Carbon disulfide	CS_2		20	–	●	●	●	0	0	0	III, VIII, X, Xc
Carbon tetrachloride	CCl_4			–	●	●	●	1	1	0	all
Chloroform Chloroform Chlor sulphonic acid	$CHCl_3$ $CHCl_3$ $HOSO_2Cl$		Kp	–	●	●	●	1	1	3	all
Chromic acid	H_2CroO_4	10	20	●	●	●	●	1	0	0	III, VIII, X, Xc
Chromic acid	H_2CroO_4	10	Kp	●	●	●	●	–	–	0	X, Xc
Chromic acid	H_2CroO_4	50	20	●		●	●	0	0	0	III, VIII, X, Xc
Citric acid	$(CH_2COOH)_2C$ $(OH)COOH$		20	●	●	●	●	3	3	0	X, Xc
Citric acid	$CH_2COOH)_2C$ $(OH)COOH$		Kp	●	●	●	●	3	3	0	X, Xc
Clophen T 64				–	●	●	●	0	0	0	all
Copper acetate wat. sol.	$(CH_3COOO)_2Cu$		20	–	●	●	●	0	0	0	all
Copper acetate wat. sol	$(CH_3COOO)_2Cu$		Kp	–	●	●	●	2	2	0	X, Xc
Copper sulphate	$CuSO_4$		20	●	●	●	●	3	2	0	X, Xc
Copper sulphate	$CuSO_4$		Kp	●	●	●	●	3	2	0	X, Xc
Diazotation bath,(weakly acid)			20	–	●	●	●	2	2	1	X, Xc
Diazotation bath,(weakly acid)			80	–	●	●	●	2	2	1	X, Xc
Diesel oil			20	●	●	●	●	0	0	0	all
Diphyl				–	●	●	●	0	0	0	all
Dowtherm A				–	●	●	●	0	0	0	all
Dye liquor, alkaline or neutral			20	●	●	●	●	–	–	–	X, Xc
Dye liquor, alkaline or neutral			Kp	●	●	●	●	–	–	0	X, Xc
Dye liquor, organic acid			20	●	●	●	●	–	–	0	X, Xc
Dye liquor, organic acid			Kp	●	●	●	●	–	–	0	X, Xc
Dye liquor,weakly sulphuric acid	H_2SO_4 under 0,3%		Kp	●	●	●	●	–	–	0	X, Xc
Dye liquor, strongly sulphuric acid	H_2SO_4 above 0,3%		20	●	●	●	●	–	–	0	X, Xc
Dye liquor, strongly sulphuric acid	H_2SO_4 above 0,3%		Kp	●	●	●	●	–	–	1	X, Xc
Ethane	C_2H_6			●	●	●	●	0	0	0	all
Ethanol	C_2H_5OH			●	●	●	●	0	0	0	all

Fluid	Chemical formular	Concentration and temperature		Materials for seals				Metallic materials			Material code
		%	°C	AF	KFC	K-Flon	Metall	EN-JL 1040	St GP 240 GH	1.4401/1.4408/ 1.4571	
Ethyl ether	$C_2H_5OC_2H_6$			–	●	●	●	1	1	0	all
Ethyl acetate	$CH_3COOC_2H_5$		Kp	–	●	●	●	0	0	0	all
Ethylene	C_2H_4			●	●	●	●	0	0	0	all
Ethylen chloride (Dichlorethan)	$(CH_2Cl)_2$	20		–	●	●	●	0	0	0	all
Fatty acids from C_6				–	●	●	●	1	1	0	all
Formaldehyde	HCHO	40	20	●	●	●	●	3	3	0	X, Xc
Formaldehyde	HCHO	40	Kp	●	●	●	●	3	3	0	X, Xc
Formic acid	HCOOH	10	20	–	●	●	●	3	3	0	X, Xc
Formic acid	HCOOH	10	100	–	●	●	●	3	3	1	X, Xc
Formic acid	HCOOH	100	20	–	●	●	●	3	3	0	X, Xc
Formic acid	HCOOH	100	100	–	●	●	●	3	3	1	X, Xc
Freon				–	●	●	●	0	0	0	all
Glacial acetic acid	CH_3COOH	10	20	–	●	●	●	2	2	0	X, Xc
Glacial acetic acid	CH_3COOH	10	Kp	–	●	●	●	2	2	0	X, Xc
Glacial acetic acid	CH_3COOH	50	20	–	●	●	●	3	2	0	X, Xc
Glacial acetic acid	CH_3COOH	50	Kp	–	●	●	●	3	2	1	X, Xc
Glacial acetic acid	CH_3COOH	80	20	–	●	●	●	3	2	1	X, Xc
Glacial acetic acid	CH_3COOH	80	Kp	–	●	●	●	3	2	1	X, Xc
Glacial acetic acid	CH_3COOH		20	–	●	●	●	2	2	0	X, Xc
Glycerine	$(CH_2OH)_2CHOH$		20	●	●	●	●	2	2	0	X, Xc
Glycerine	$(CH_2OH)_2CHOH$		100	●	●	●	●	2	2	0	X, Xc
Grape vinegar			20	●	●	●	●	–	–	0	X, Xc
Heat transfer oils				–	●	●	●	0	0	0	all
Hydrochloric acid, dry	HCl		20	–	●	●	●	1	1	1	all
Hydrochloric acid, dry	HCl		100	–	●	●	●	1	1	2	all
Hydrochloric acid	HCl	0,2	20	●	●	●	●	3	3	0	X, Xc
Hydrochloric acid	HCl	0,2	50	●	●	●	●	3	3	1	X, Xc
Hydrochloric acid	HCl	1	20	●	●	●	●	3	3	1	X, Xc
Hydrogen	H_2			●	●	●	●	0	0	0	all
Hydrogen peroxide	H_2O_2		20	–	●	●	●	3	3	0	X, Xc
Hydrogen peroxide	H_2O_2		50	–	●	●	●	3	3	0	X, Xc
Hydrogen sulphide, gas, dry	H_2S		20	–	●	●	●	–	–	0	X, Xc
Hydrogen sulphide, gas,wet	H_2S		20	–	●		●	–	–	0	X, Xc
Hydroxylamine sulphate	$(NH_2OH)H_2SO_4$	10	20	●	●	●	●	–	–	0	X, Xc
Hydroxylamine sulphate	$(NH_2OH)H_2SO_4$	10	Kp	●	●	●	●	–	–	0	X, Xc
Illuminating gas				●	●	●	●	0	0	0	all
Kreosote			20	–	●	●	●	–	–	0	X, Xc
Kreosote			Kp	–	●	●	●	–	–	0	X, Xc
Lead acetate (lead sugar)	$Pb(CH_3C00)_2$	100	Kp	●	●	●	●	3	3	2	X, Xc
Lead arsenate	$Pb(As0_4)_2$			–	●	●	●	–	–	0	X, Xc
Linseed oil			20	●	●	●	●	–	–	0	X, Xc
Linseed oil			100	●	●	●	●	–	–	0	X, Xc
Magnesium sulphate	$MgSO_4$		20	●	●	●	●	1	1	0	all
Magnesium sulphate	$MgSO_4$		Kp	●	●	●	●	1	1	0	all
Manganous chloride	$MnCl_2$		20	–	●	●	●	2	2	0	X, Xc
Manganous chloride	$MnCl_2$		Kp	–	●	●	●	2	2	0	X, Xc
Mercury	Hg		20	●	●	●	●	1	1	0	III, VIII, X, Xc
Mercury (II) chloride	$HgCl_2$		20	●	●	●	●	3	3	0	X, Xc
Mercury (II) nitrate	$Hg(NO_3)_2$		20	–	●	●	●	3	3	0	X, Xc
Methyl alcohol	CH_3OH		20	●	●	●	●				all
Methyl alcohol	CH_3OH		Kp	●	●	●	●				all
Methylene chloride	CH_2Cl_2		20								
Methylene chloride	CH_2Cl_2		Kp								
M.E.K (Butanone)	$CH_3COC_2H_5$		Kp								

Fluid	Chemical formular	Concentration and temperature		Materials for seals				Metallic materials			Material code
		%	°C	AF	KFC	K-Flon	Metall	EN-JL 1040	St GP 240 GH	1.4401/1.4408/ 1.4571	
Milk of lime	$Ca(OH)_2$		20	–	●	●	●	0	0	0	all
Milk of lime	$Ca(OH)_2$		Kp	–	●	●	●	0	0	0	all
Milk				●	●	●	●	2	2	0	X, Xc
Natrium acetate	CH_3COONa	20	20	–	●	●	●	1	1	0	all
Natural gas				●	●	●	●	1	0	0	all
Nitric acid	HNO_3	10	20	●	●	●	●	3	3	0	X, Xc
Nitric acid	HNO_3	10	Kp	●	●	●	●	3	3	0	X, Xc
Nitric acid	HNO_3	40	20	●	●	●	●	3	3	0	X, Xc
Nitric acid	HNO_3	40	Kp	●	●	–	●	3	3	0	X, Xc
Nitric acid	HNO_3	konz.	20	●	●	●	●	3	3	0	X, Xc
Nitric acid	HNO_3	konz.	Kp	●	●	–	●	3	2	1	X, Xc
Nitrogen	N_2			●	●	●	●	0	0	0	all
Oils (lubricating oils, mineral)			20	●	●	●	●	0	0	0	all
Oils (vegetable)			20	●	●	●	●	0	0	0	all
Oleic acid	$C_{17}H_{33}COOH$			●	●	●	●	0	0	0	all
Oxalic acid	COOHCOOH			●	●	●	●	2	2	8	X, Xc
Oxygen	0_2		20	●	●	●	●	0	0	0	all
Penthyl acetate	$CH_3COOC_5H_{11}$			–	●	●	●	0	0	0	all
Petroleum ether			20	–	●	●	●	0	0	0	all
Phenol	C_6H_5OH			●	●	●	●	2	2	0	X, Xc
Phosphoric acid	H_3PO_4	10	20	●	●	●	●	2	2	0	X, Xc
Phosphoric acid	H_3PO_4	10	Kp	●	●	●	●	3	3	0	X, Xc
Phosphoric acid	H_3PO_4	50	20	●	●	●	●	2	2	0	X, Xc
Phosphoric acid	H_3PO_4	50	Kp	●	●	●	●	3	3	1	X, Xc
Phosphoric acid	H_3PO_4	80	20	●	●	●	●	3	3	0	X, Xc
Phosphoric acid	H_3PO_4	80	Kp	●	●	●	●	3	3	2	X, Xc
Potassium acetate	CH_3COOK		Kp	–	●	●	●	0	0	0	all
Potassium dichromate	$K_2Cr_2O_7$	25	20	●	●	●	●	0	0	0	all
Potassium dichromate	$K_2Cr_2O_7$		Kp	●	●	●	●	2	2	0	X, XC
Potassium hydrogenartrate	$COOH(CHOH)_2COOK$		20	●	●	●	●	–	–	0	X, Xc
Potassium hydrogenartrate (at 100°, sat.sol.)	$COOH(CHOH)_2COOK$		Kp	●	●	●	●	–	–	1	X, Xc
Potassium carbonate	K_2CO_3	50	20	●	●	●	●	1	0	0	all
Potassium carbonate (potash)	K_2CO_3		Kp	●	●	●	●	1	0	0	all
Potassium chlorate (at 100°, sat.sol.)	$KClO_3$		Kp	●	●	●	●	2	2	0	X, Xc
Potassium chromium sulphate	$KCr(SO_4)_2 12H_2O$		20	●	●	●	●	–	–	0	X, Xc
Potassium chromium sulphate (chromic alum)	$KCr(SO_4)_2 12H_2O$		Kp	●	●	●	●	–	–	3	all
Potassium hydroxyde	KOH	25	20	●	●	●	●	0	0	0	X, Xc
Potassium hydroxyde	KOH	25	Kp	●	●	●	●	–	–	0	all
Potassium hydroxyde	KOH	50	20	●	●	●	●	0	0	0	X, Xc
Potassium hydroxyde	KOH	50	Kp	●	●	●	●	3	3	0	X, Xc
Potassium hydrochlorite	KOCl		20	–	●	●	●	2	2	1	X. Xc
Potassium hydrochlorite up to 20g akt. Cl_2/l	KOCl		40	–	●	●	●	2	2	1	Xc
Potassium iodide	KJ		Kp	–	●	●	●	2	2	0	III, VIII, X, Xc
Potassium iodide	KJ			–	●	●	●	1	1	0	
Potassium nitrate	KNO_3		20	●				0	0	0	all
Potassium nitrate	KNO_3		Kp	●				2	2	0	X, Xc
Potassium permanganate	$KMnO_4$		20	●				0	0	0	all
Potassium permanganate	$KMnO_4$		Kp					3	3	0	X, Xc
Potassium cyanide solution	KCN	5	20	●	●	●	●	1	1	0	III, VIII, X, Xc
Propane	C_3H_8		20	●	●	●	●	0	0	0	all

Fluid	Chemical formular	Concentration and temperature		Materials for seals				Metallic materials			Material code
		%	°C	AF	KFC	K-Flon	Metall	EN-JL 1040	St GP 240 GH	1.4401/1.4408/ 1.4571	
Salicylic acid	$C_6H_4OHCOOH$		20	–	•	•	•	2	2	0	X, Xc
Salpeter				•	•	•	•	0	0	0	all
Sea water			20	•	•	•	•	3	3	0	X, Xc
Sea water			Kp	•	•	•	•	3	3	0	X, Xc
Silicone oil				•	•	•	•	0	0	0	all
Soap				•	•	•	•	0	0	0	all
Sodium carbonate	Na_2CO_3		20	•	•	•	•	0	0	0	all
Sodium carbonate	Na_2CO_3		Kp	•	•	•	•	1	1	0	all
Sodium hydroxide	NaOH	20	Kp	•	•	•	•	0	0	0	all
Sodium hydroxide	NaOH	35	20	•	•	•	•	–	–	0	X, Xc
Sodium hydroxide	NaOH	35	Kp	•	•	•	•	0	0	0	all
Sodium hydroxide	NaOH			•	•	•	•	3	3	0	X, Xc
Sodium sulphate	Na_2SO_4			•	•	•	•	0	0	0	all
Sole	NaCl		20	•	•	•	•	3	3	1	X, Xc
Spinbath (up to 10% H_2SO_4)			80	•	•	•	•	3	3	0	X, Xc
Starch solution				•	•	•	•	2	2	0	X, Xc
Steam (water vapour)				•	•	•	•	0	0	0	all
Stearic acid	$C_{17}H_{35}$ COOH			•	•	•	•	2	2	0	X, Xc
Sugar			20	•	•	•	•	1	1	0	all
Sugar			80	•	•	•	•	1	1	0	all
Sulphite lye (fresh cooking liquor, spent liquor)	$Ca(HSO_3)_2$		20	–	•	•	•	–	–	0	X, Xc
Sulphite lye (fresh cooking liquor, spent liquor)	$Ca(HSO_3)_2$		80	–	•	•	•	–	–	0	X, Xc
Sulphur dioxide	SO_2			•	•	•	•	3	3	0	X, Xc
Sulphurous acid (cold) sat.sol.	H_2SO_3			•	•	•	•	3	3	0	X, Xc
Sulfphuric acid	H_2SO_4	1	20	•	•	•	•	3	3	0	X, Xc
Sulfphuric acid	H_2SO_4	10	20	•	•	•	•	3	3	0	X, Xc
Sulfphuric acid	H_2SO_4	90	20	•	•	•	•	1	1	0	
Sulfphuric acid	H_2SO_4	konz.	20	•	•	•	•	0	0	0	all
Tannic acid	$C_{76}H_{52}O_{46}$	10	20	•	•	•	•	2	2	0	X, Xc
Tannic acid	$C_{76}H_{52}O_{46}$	10	Kp	•	•	•	•	3	3	0	X, Xc
Tannic acid	$C_{76}H_{52}O_{46}$	50	20	•	•	•	•	2	2	0	X, Xc
Tar (neutral)			180	–	•	•	•	1	1	0	III, VII, X, Xc
Tartaric acid	$(CHOHCOOH)_2$		20	•	•	•	•	2	2	0	X, Xc
Toluol	$C_6H_5CH_3$		20	–	•	•	•	0	0	0	all
Trichlorethylene	C_2HCl_3			–	•	•	•	1	1	0	all
Turpentine oil			20	–	•	•	•	0	0	0	all
Urea	$(NH_2)_2CO$		20	•	•	•	•	1	1	0	all
Water (fresh-a.drinking water)	H_2O			•	•	•	•	0	0	0	all
Water vapour < 140 °C				•	•	•	•	0	0	0	VII, VIII
Water vapour > 140 °C				•	•	•	•	0	0	0	VII, VIII
Water glass (K- and Na-silicate)	$K_2SiO_3Na_2HCl_3$			–	•	•	•	0	0	0	all
Xylene	$C_6H_4(CH_3)_2$		20	–	•	•	•	0	0	0	all

KHI ball valves in district heating system

KHI ball valves in district heating system

14.9 m in diameter is one of the biggest drills in the world, that is used to build the largest railway tunnel in the Netherlands. In this application KLINGER Ballostar ball valves are applied for Betonit injection and for the transport of mud. Our products meet the highest requested requirements under difficult conditions.

Applications

Installation of KLINGER Ballostar KHSVI in the North of Poland

Final expection (pressure testing) of a KLINGER Ballostar KHSVI ball valve acc. to DIN 3230

Installation site of Stadtwerke Kiel (Kiel's municipal utility): Klinger Ballostar KHSVI and Monoball ball valves

KHI DN 400 equipped with pneumatic actuator

Application example:
Valves for oxygen in steel mills

Oxygen requires high demands for all components of a plant. Therefore all parts must be without any traces of oil or fat at any time in order to avoid self-in-flammation.
KLINGER Ballostar ball KHI and KHA ball valves (for oxygen acc. to KLN 840) consisting of both steel casting and stainless steel, are famous for their high safety and the small space that is needed for installation.

KLINGER product range

Product range

Ballostar®KHA
3-piece ball valve made of grey cast iron, steel or stainless steel

Ballostar®KHI
2-piece ball valve with trunnion mounted ball, made of grey cast iron, steel or stainless steel

Ballostar®KHE
2-piece ball valve with floating ball, made of steel or stainless steel

Monolith KHO
One-piece fully welded ball valve made of casted steel

KLINGER Monoball®
One-piece ball valve made of steel

KLINGER Ball-o-top
Brass ball valves

Piston valves KVN
made of grey cast iron, nodular cast iron, steel or stainless steel

KLINGERMATIC®
Actuator for piston valves and ball valves

Reflex and transparent gauge glasses

Circular sight-glasses

AB cocks
Packing-sleeve cocks and pressure-gauge cocks in brass, steel and stainless steel

Key role

Link

Innovation

Navigation

Growth

Efficiency

Routine

KHI eng 3/11

KLINGER Fluid Control GmbH
A-2352 Gumpoldskirchen, Austria
Postfach 19, Am Kanal 8–10
Tel. +43 (0)2252-600-0
Fax +43 (0)2252-600-100
e-mail: office@klinger.kfc.at
www.klinger.kfc.at